SCALE : N.T.S.

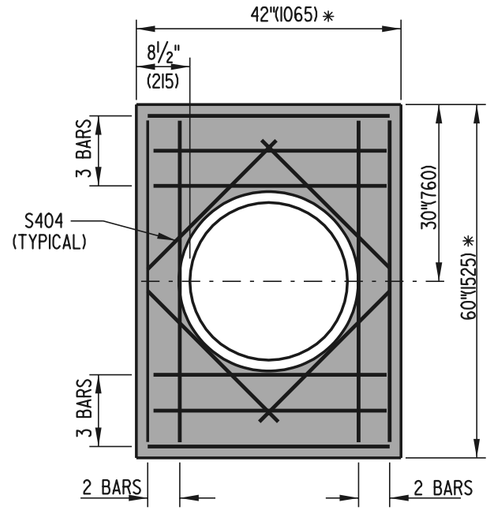

48" (1220) X 30" (760) MANHOLE

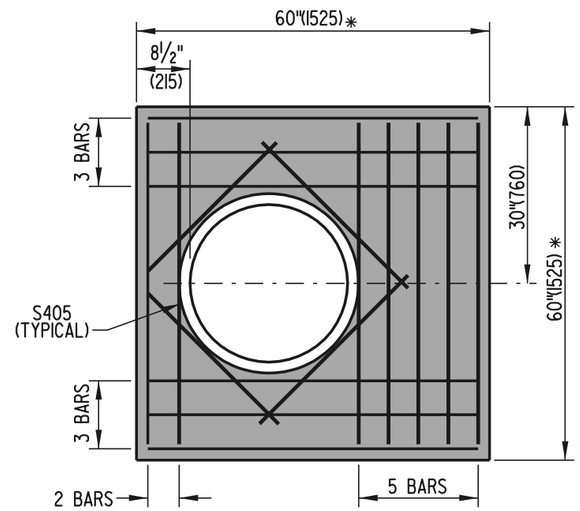

48" (1220) X 48" (1220) MANHOLE

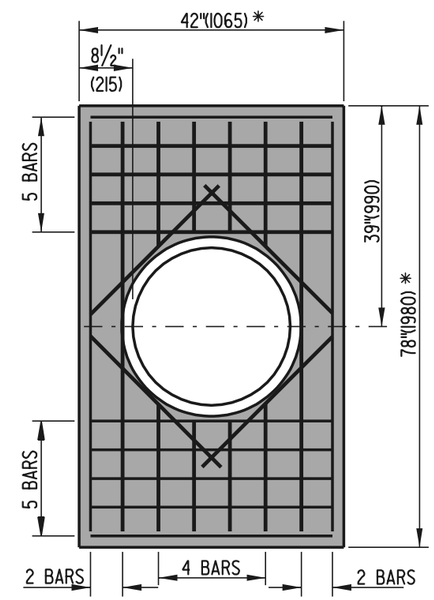

66" (1675) x 30" (760) MANHOLE

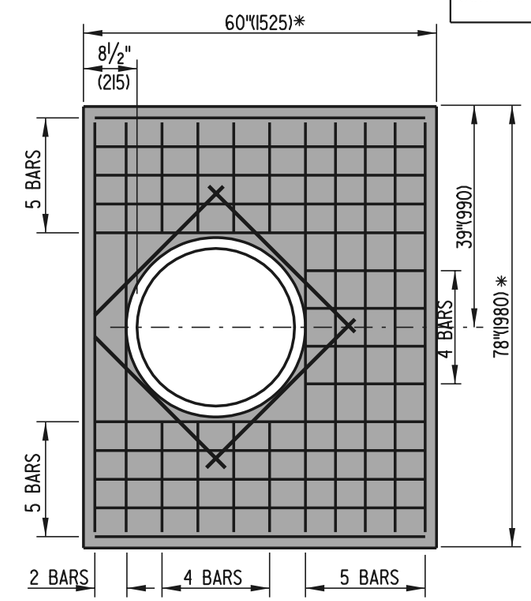

66" (1675) x 48" (1220) MANHOLE

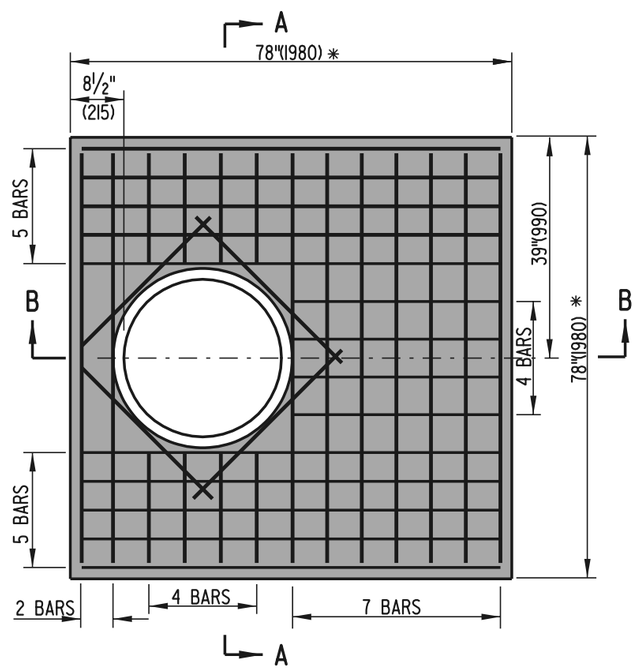

66" (1675) x 66" (1675) MANHOLE

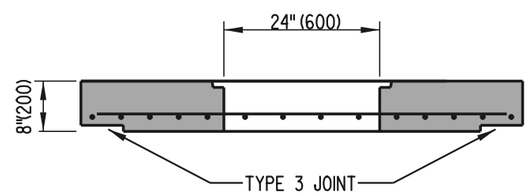

SECTION A-A

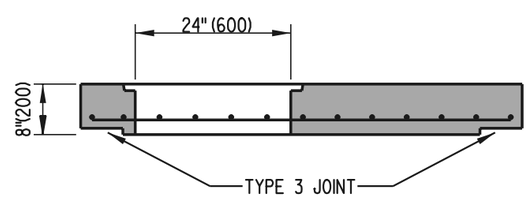

SECTION B-B

BOX MANHOLE COVER SLAB DETAILS

NOTES:

1. COVER SLABS SHALL BE PRE-CAST.
2. ALL BARS SHALL BE #5 (#16) SPACED AT 6" (150) ± UNLESS NOTED OTHERWISE.
3. MINIMUM BAR COVER = 1½" (38).

* - DIMENSIONS TO MATCH OUTSIDE TO OUTSIDE DIMENSIONS OF BOX.

DELAWARE DEPARTMENT OF TRANSPORTATION	MANHOLE DETAILS		APPROVED Carolann Wicks (CHIEF ENGINEER) 9/6/02 (DATE)
	STANDARD NO. D-6 (2002)	SHT. 4 OF 4	RECOMMENDED (DESIGN ENGINEER) 8/19/02 (DATE)

06/11/2002

SCALE : N.T.S.

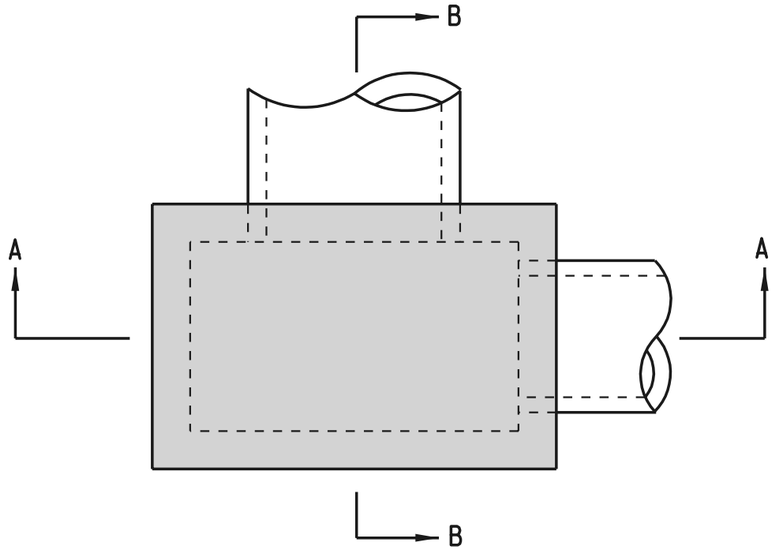

PLAN

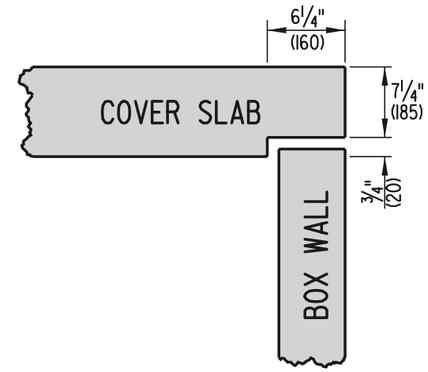

TYPE 3 JOINT DETAIL

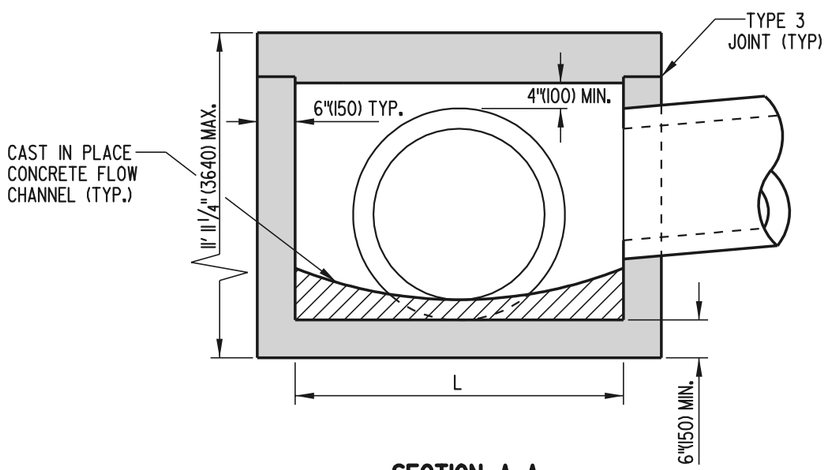

SECTION A-A

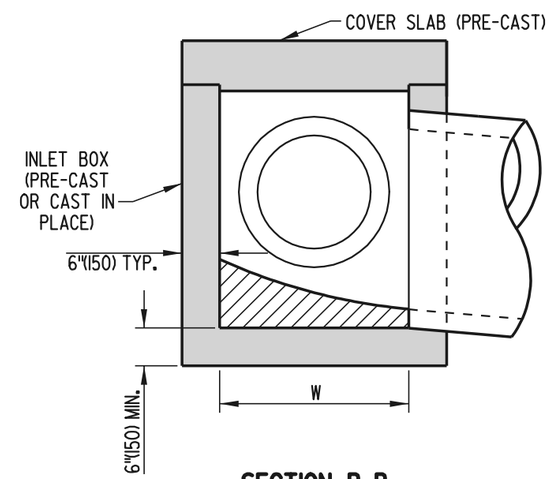

SECTION B-B

JUNCTION BOX ASSEMBLY

DELAWARE DEPARTMENT OF TRANSPORTATION	JUNCTION BOX DETAILS		APPROVED Carolann Wicks (CHIEF ENGINEER) 9/6/02 (DATE)
	STANDARD NO. D-7 (2002)	SHT. 1 OF 2	RECOMMENDED (DESIGN ENGINEER) 8/19/02 (DATE)

05/02/2002

SCALE : N.T.S.

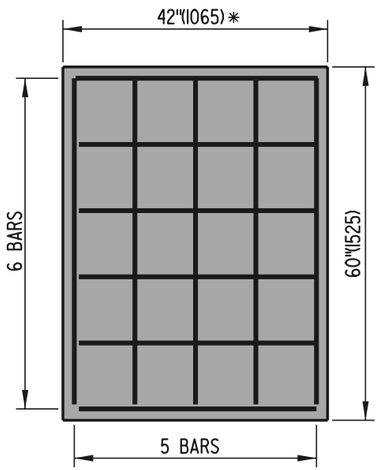

48" (1220) x 30" (760)
JUNCTION BOX

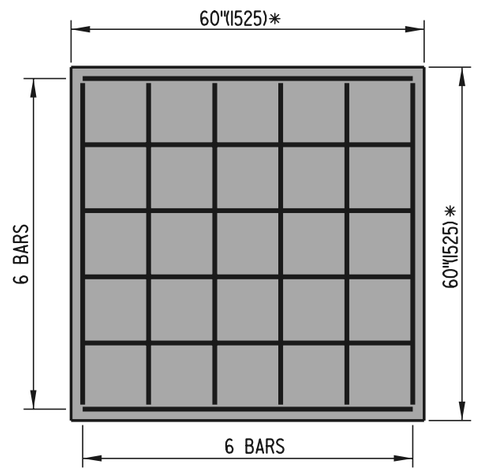

48" (1220) x 48" (1220)
JUNCTION BOX

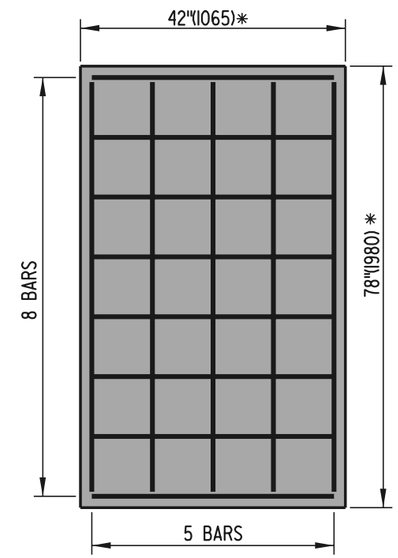

66" (1675) x 30" (760)
JUNCTION BOX

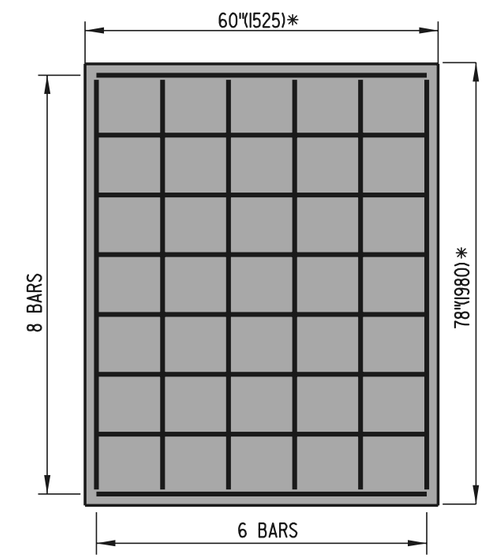

66" (1675) x 48" (1220)
JUNCTION BOX

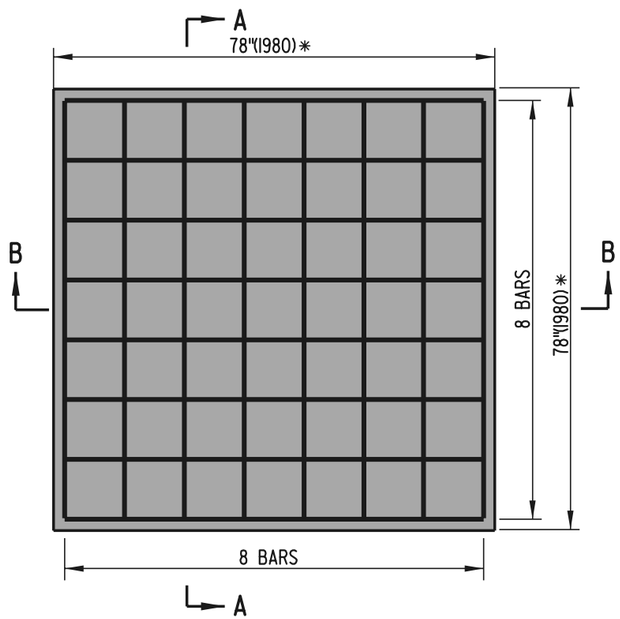

66" (1675) x 66" (1675)
JUNCTION BOX

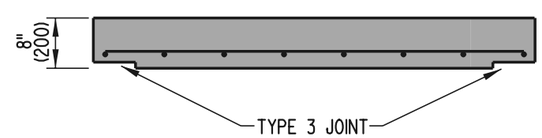

SECTION A-A

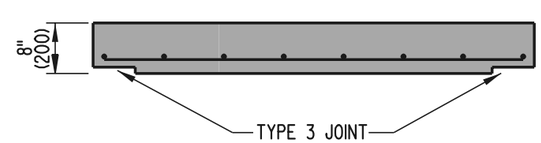

SECTON B-B

JUNCTION BOX COVER SLAB DETAILS

NOTES :

1. COVER SLABS ARE TO BE PRE-CAST.
2. ALL BARS ARE TO BE #5 (#16) SPACED @ 12" (305) ± UNLESS NOTED OTHERWISE.
3. MINIMUM BAR COVER = 1½" (38).

* - DIMENSIONS TO MATCH OUTSIDE TO OUTSIDE DIMENSIONS OF BOX

DELAWARE DEPARTMENT OF TRANSPORTATION	JUNCTION BOX DETAILS		APPROVED Carolann Wicks (CHIEF ENGINEER) 9/6/02 (DATE)
	STANDARD NO. D-7 (2002)	SHT. 2 OF 2	RECOMMENDED (DESIGN ENGINEER) 8/19/02 (DATE)

04/24/2002

SCALE : N.T.S.

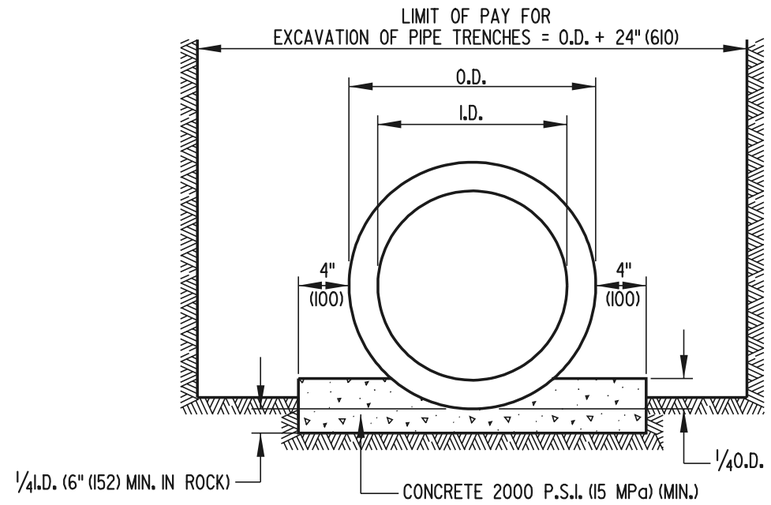

CLASS A BEDDING

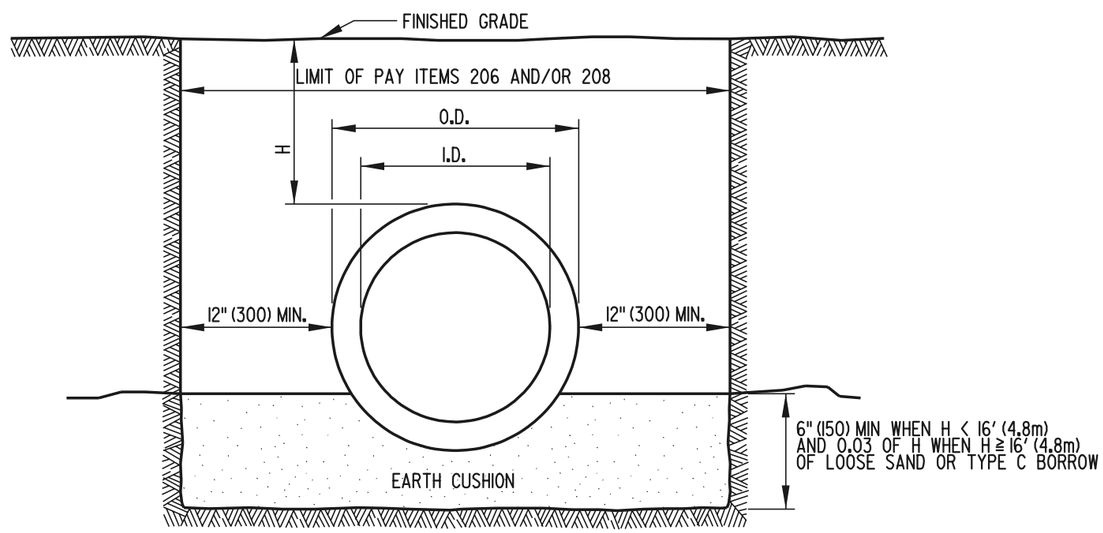

CLASS C BEDDING

NOTE: USE CLASS C BEDDING UNLESS OTHERWISE INDICATED

DELAWARE DEPARTMENT OF TRANSPORTATION	PIPE BEDDING		APPROVED CHIEF ENGINEER 6/18/01 DATE
	STANDARD NO. D-8 (2001)	SHT. 1 OF 1	RECOMMENDED DESIGN ENGINEER 6/15/01 DATE

05/30/2001

SCALE : N.T.S.

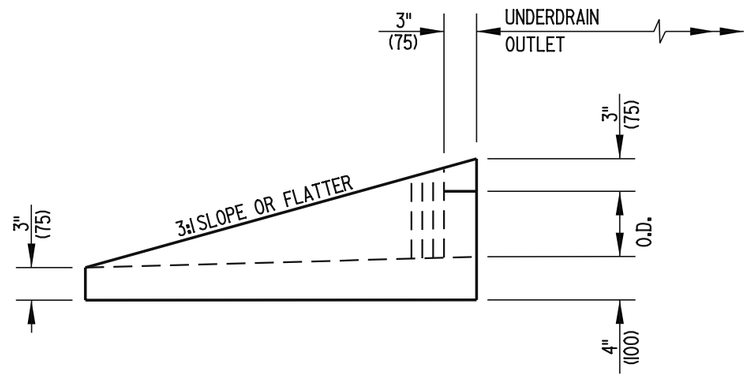

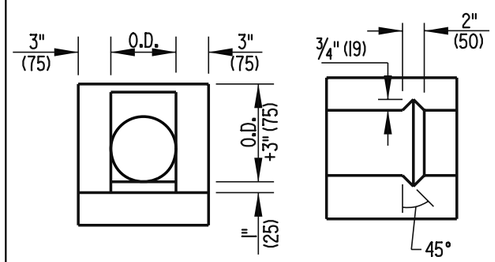

FRONT VIEW **TOP VIEW**

SLOTTED HEADWALL DETAIL

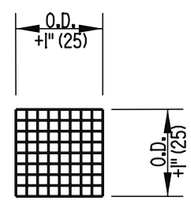

FRONT VIEW

RODENT SCREEN

DOWNSPOUT SPLASH APRON FOR UNDERDRAIN OUTLET

NOT TO SCALE

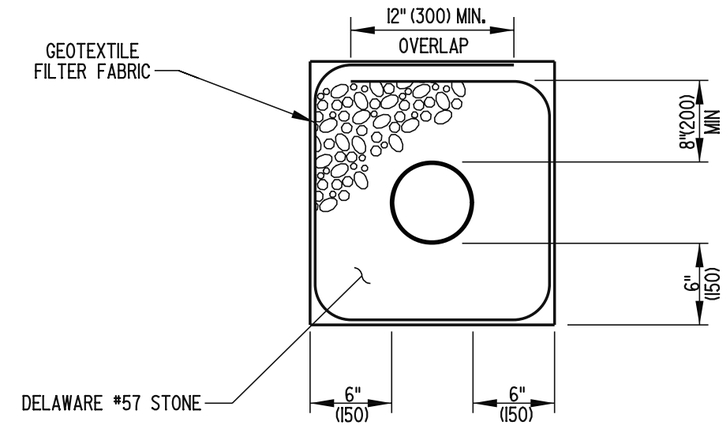

SECTION

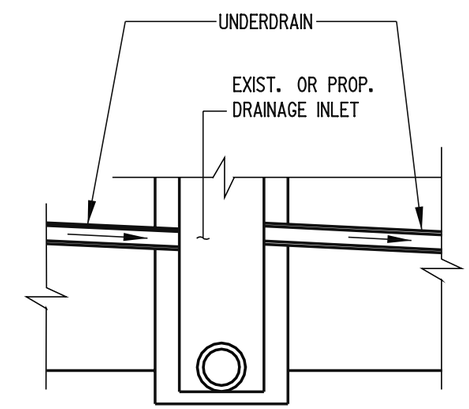

ELEVATION

PERFORATED PIPE UNDERDRAIN

NOT TO SCALE

NOTES:

1). THE PERFORATED PIPE UNDERDRAIN SHALL BE LOCATED AS SHOWN ON THE TYPICAL SECTIONS OF THE CONSTRUCTION PLANS.
2). GEOTEXTILE FILTER FABRIC SHALL BE PLACED ENTIRELY OVER THE TOP OF UNDERDRAIN TRENCH AND LAPPED AS SHOWN.
3). SLOPE OF UNDERDRAINS SHALL MATCH ROADWAY GRADE, UNLESS OTHERWISE DIRECTED BY THE ENGINEER.
4). OUTLET PIPE CONFIGURATIONS SHALL USE 45 DEGREE ELBOWS OR SHALL USE STRAIGHT PIPE WITH A MINIMUM RADIUS OF 3' (900) TO DIRECT UNDERDRAIN PIPE INTO SIDE OF DRAINAGE INLET OR TO POSITIVE GRADE. PIPE SHALL ALSO BE NON-PERFORATED AND HAVE A SMOOTH INTERIOR.
5). RODENT SCREEN SHALL SNUGLY FIT THE PROVIDED SLOT WITH THE SCREEN LIP FITTING TIGHT TO THE BOTTOM FLOW LINE.
6). A 4' (1200) FLEXIBLE DELINEATOR SHALL BE FURNISHED AND INSTALLED AT THE DIRECTION OF THE ENGINEER TO MARK THE LOCATION OF THE CONCRETE HEADWALL. COST INCIDENTAL TO DOWNSPOUT SPLASH APRONS ITEM.
7). WHEN TWO LINES OF PIPE UNDERDRAIN DRAIN TO A LOW POINT, EACH PIPE MUST HAVE ITS OWN OUTLET.
8). PERFORATED PIPE UNDERDRAIN SHALL NOT BE PLACED UNDER GUARDRAIL IN ORDER TO AVOID PUNCTURING.

DELAWARE DEPARTMENT OF TRANSPORTATION	PERFORATED PIPE UNDERDRAIN DETAIL		APPROVED CHIEF ENGINEER — DATE 10/10/06
	STANDARD NO. D-9 (2006)	SHT. 1 OF 1	RECOMMENDED DESIGN ENGINEER — DATE 10/9/06

08/04/2006

SCALE : N.T.S.

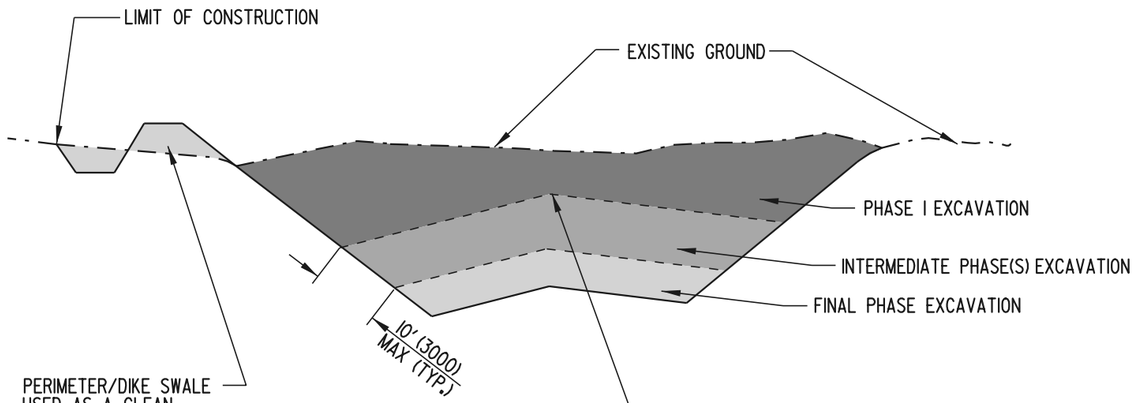

CUT SECTION

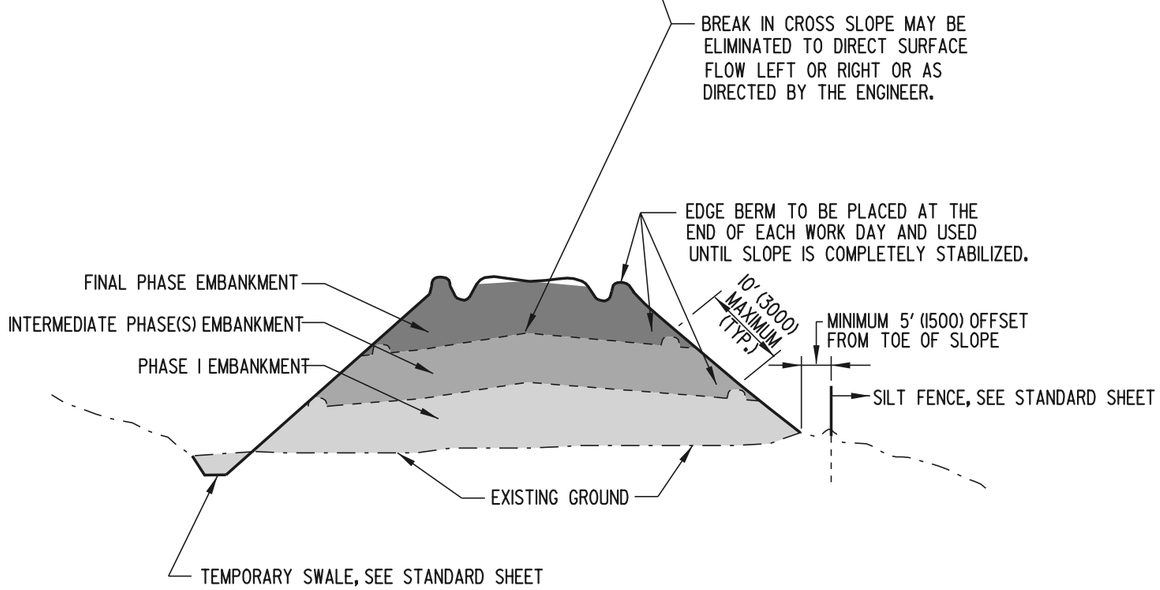

FILL SECTION

NOTES: 1.) EDGE BERMS AND TEMPORARY SLOPE DRAINS SHALL BE CONSTRUCTED ALONG THE TOP OF ALL SLOPES TO INTERCEPT RUNOFF AND CONVEY IT DOWN THE SLOPE FACES WITHOUT CREATING GULLIES OR WASHOUTS.

2.) SLOPE FACES SHALL BE TRACKED WITH CLEATED EQUIPMENT SUCH THAT THE CLEAT MARKS ARE ORIENTED HORIZONTALLY.

3.) ALL CUT AND FILL SLOPES OF THE HIGHWAY EMBANKMENT SHALL BE PERMANENTLY STABILIZED AS THE WORK PROGRESSES IN INCREMENTS NOT TO EXCEED 10' (3000) MEASURED ALONG THE SLOPE.

4.) CROSS SLOPES SHALL BE 2% MINIMUM, 6% MAXIMUM.

DELAWARE DEPARTMENT OF TRANSPORTATION	INCREMENTAL STABILIZATION		APPROVED [signature] CHIEF ENGINEER 6/18/01 DATE
	STANDARD NO. E-1 (2001)	SHT. 1 OF 1	RECOMMENDED [signature] DESIGN ENGINEER 6/15/01 DATE

05/30/2001

SCALE : N.T.S.

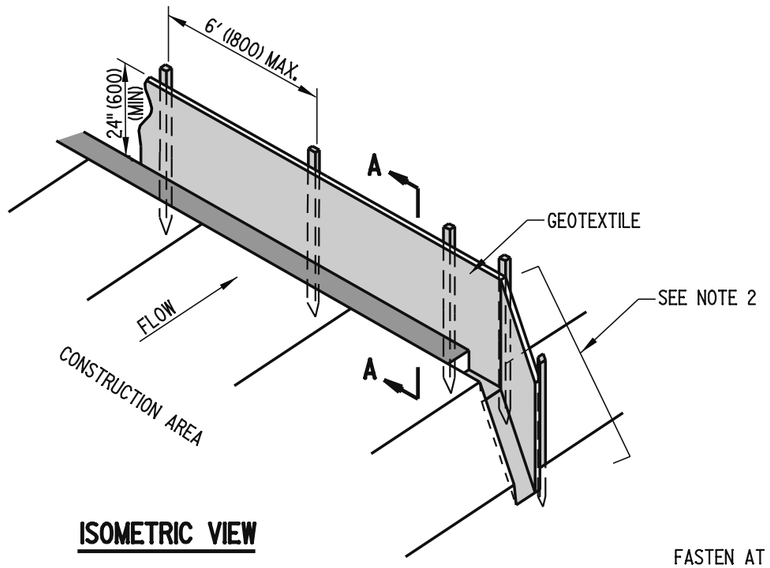

ISOMETRIC VIEW

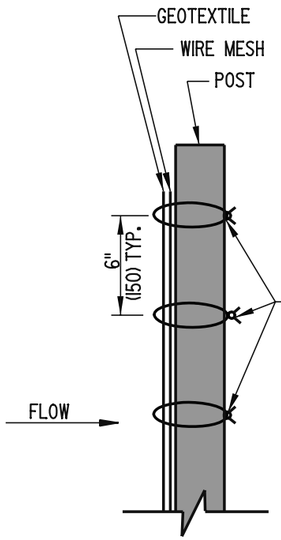

SECTION B-B

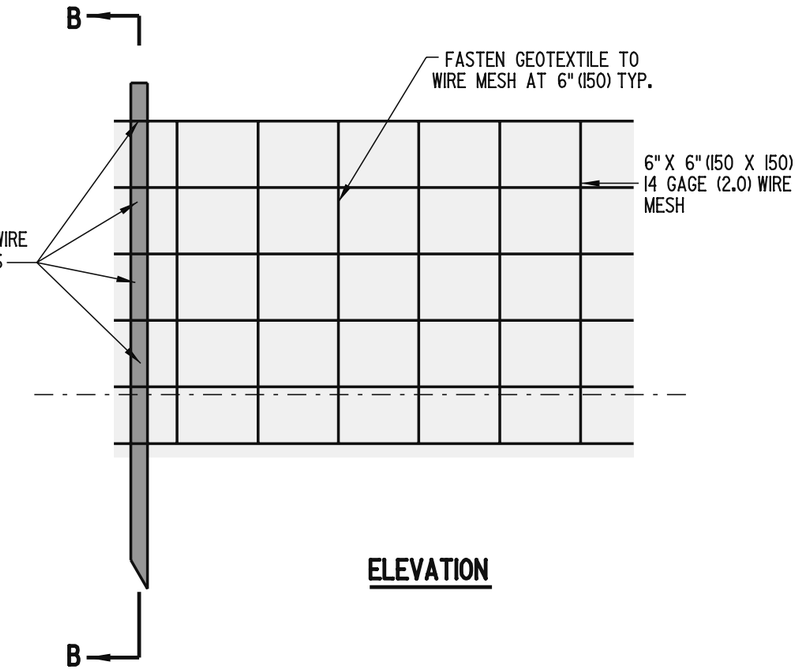

ELEVATION

WIRE MESH DETAIL
(REINFORCED SILT FENCE ONLY)

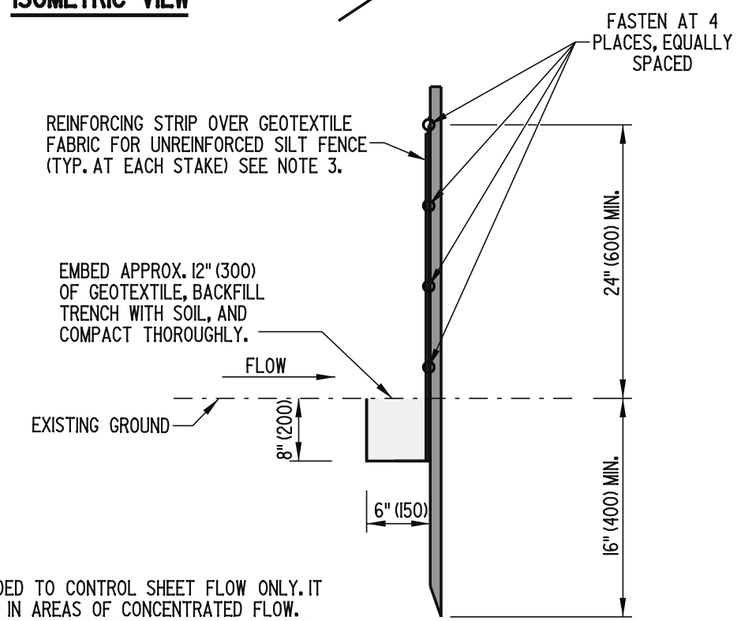

SECTION A-A

NOTES:

1). THIS DEVICE IS INTENDED TO CONTROL SHEET FLOW ONLY. IT SHALL NOT BE USED IN AREAS OF CONCENTRATED FLOW.
2). SILT FENCE ENDS SHALL BE TURNED UPSLOPE TO CONTAIN RUNOFF.
3). REINFORCING STRIP IS TO BE ONE COMPLETE STRIP COVERING ALL GEOTEXTILE FABRIC AT POST.

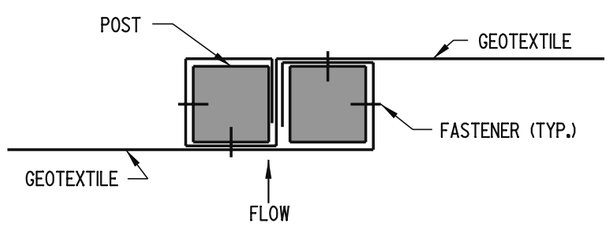

UNREINFORCED SILT FENCE CONNECTON DETAIL

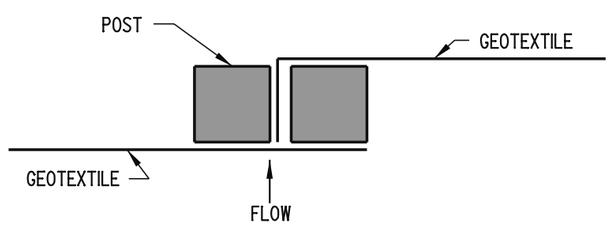

REINFORCED SILT FENCE CONNECTON DETAIL

DELAWARE DEPARTMENT OF TRANSPORTATION	SILT FENCE		APPROVED CHIEF ENGINEER 10/10/06 DATE
	STANDARD NO. E-2 (2006)	SHT. 1 OF 1	RECOMMENDED DESIGN ENGINEER 10/9/06 DATE

10/02/2006

SCALE : N.T.S.

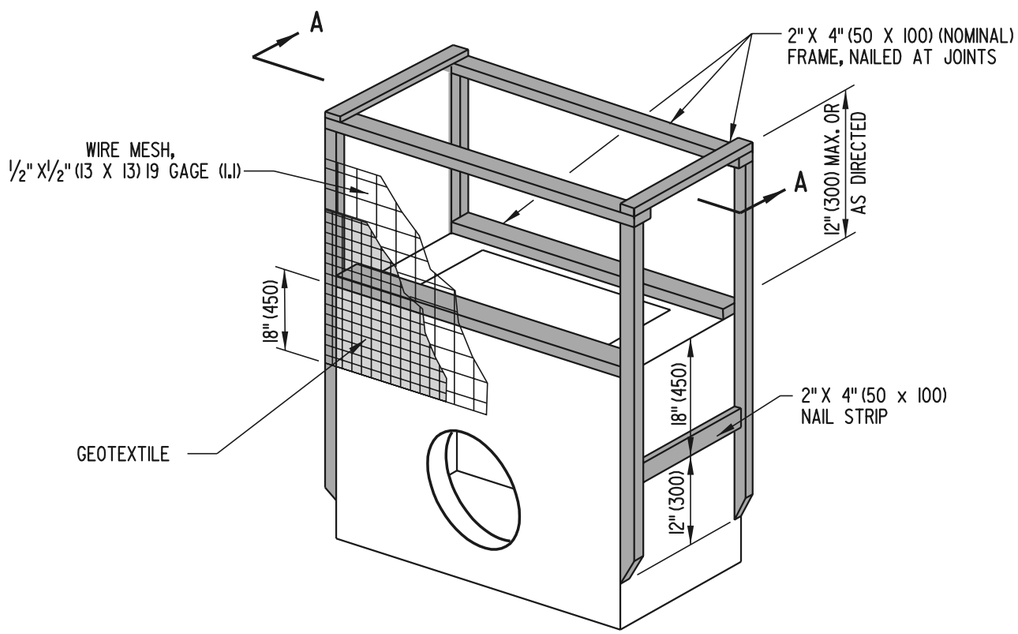

ISOMETRIC VIEW

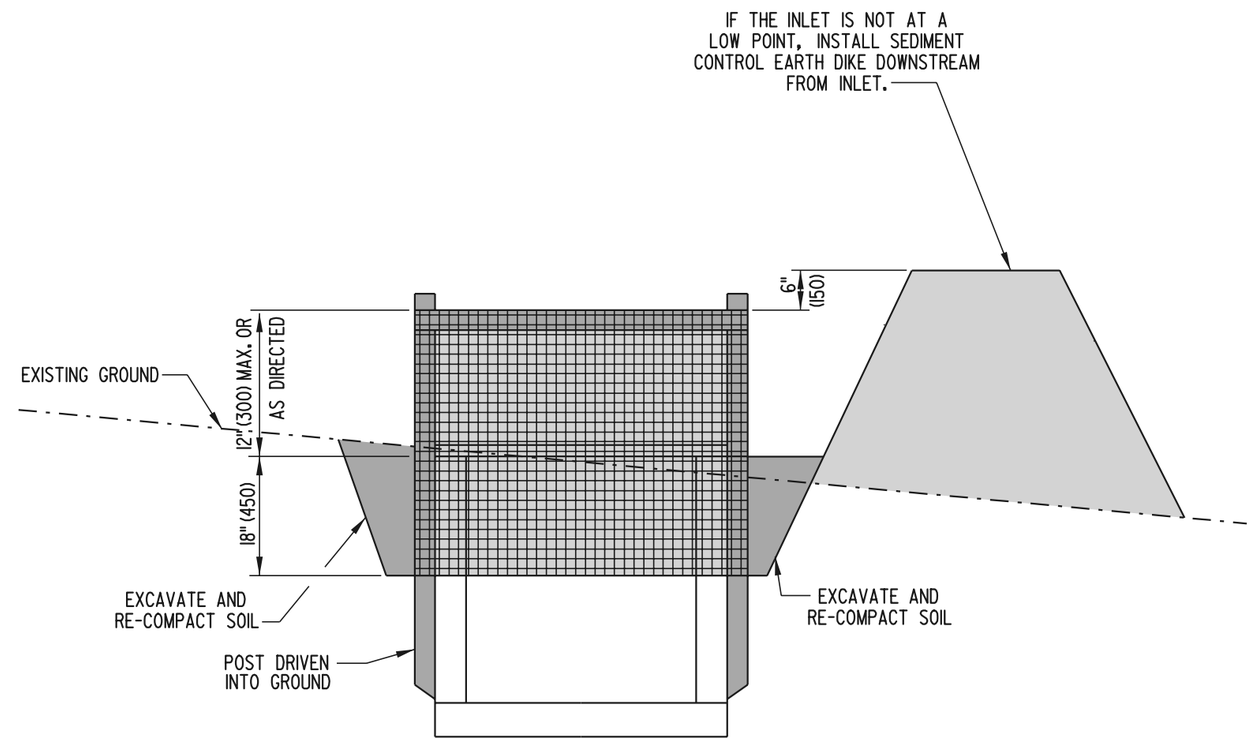

SECTION A-A

NOTE: IF THE INLET IS NOT IN A LOW POINT, CONSTRUCT A SEDIMENT CONTROL EARTH DIKE IN THE DITCHLINE DOWNSTREAM FROM IT. SEE STANDARD SHEET FOR ADDITIONAL INFORMATION.

PLAN SYMBOL

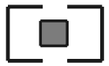

DELAWARE DEPARTMENT OF TRANSPORTATION	DRAINAGE INLET SEDIMENT CONTROL			APPROVED CHIEF ENGINEER 6/18/01 DATE
	STANDARD NO. E-3 (2001)	SHT. 1 OF 1		RECOMMENDED DESIGN ENGINEER 6/15/01 DATE

05/21/2001

SCALE : N.T.S.

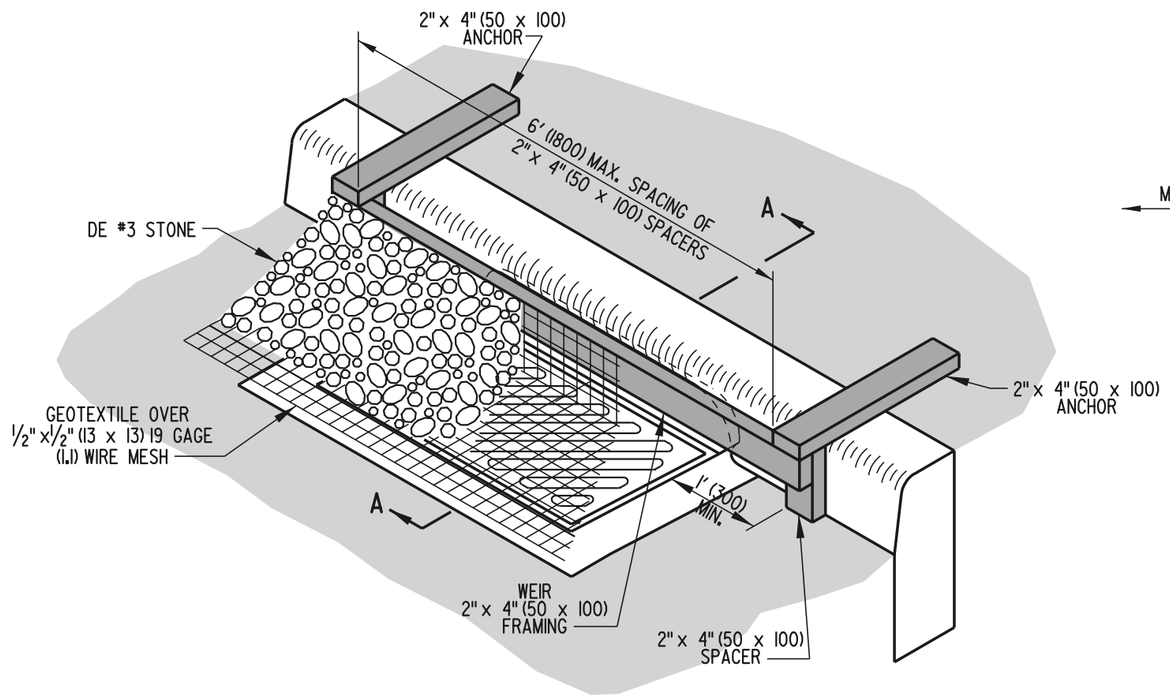

ISOMETRIC VIEW

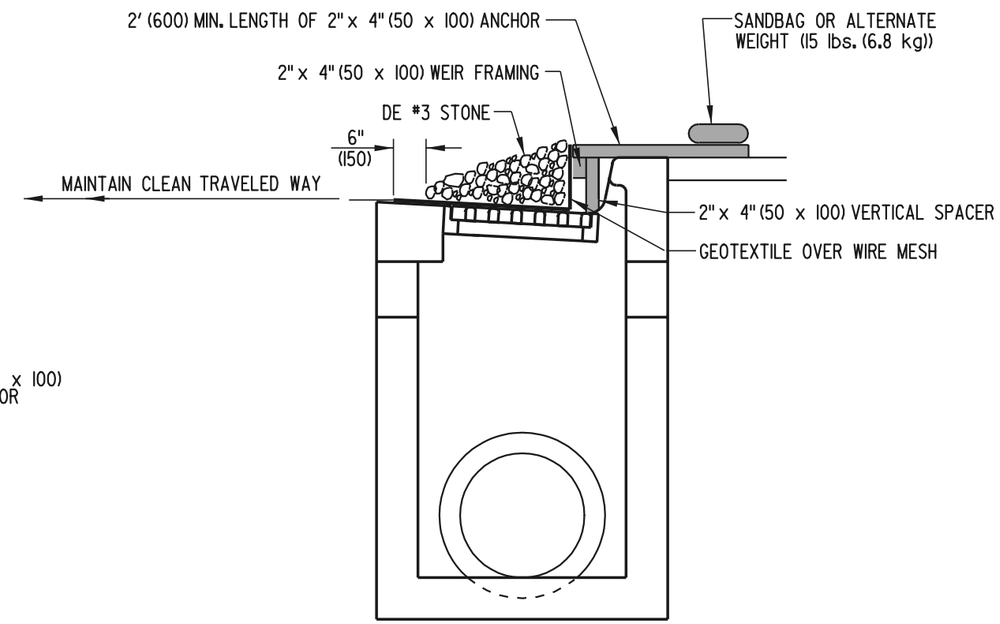

SECTION A-A

PLAN SYMBOL

DELAWARE DEPARTMENT OF TRANSPORTATION	CURB INLET SEDIMENT CONTROL		APPROVED [signature] CHIEF ENGINEER 6/18/01 DATE
	STANDARD NO. E-4 (2001)	SHT. 1 OF 1	RECOMMENDED [signature] DESIGN ENGINEER 6/15/01 DATE

05/21/2001

SCALE : N.T.S.

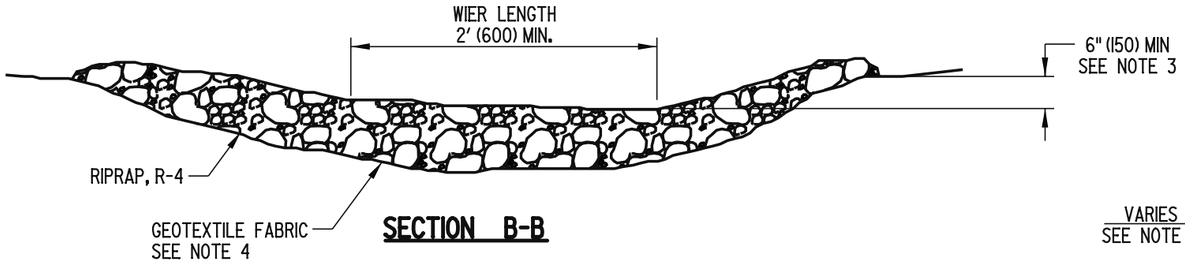

SECTION B-B

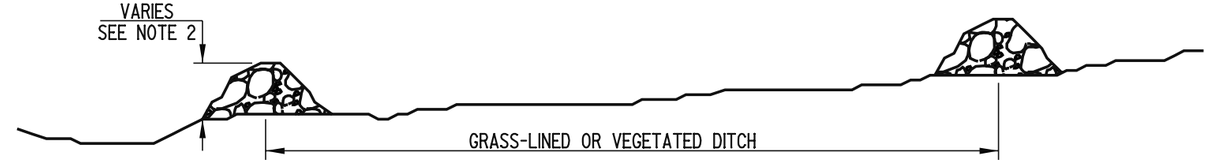

SECTION A-A

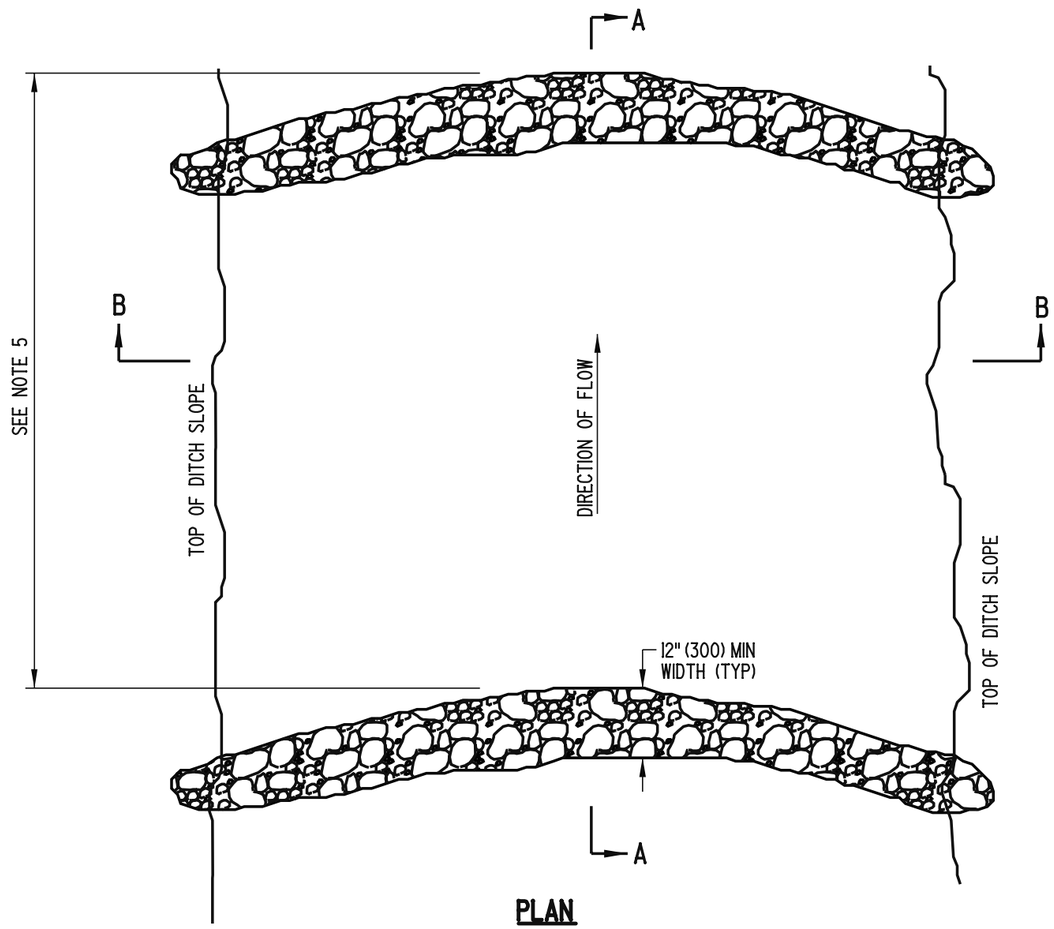

PLAN

NOTES:

1). FOR DITCHES LESS THAN 30" (750) IN DEPTH, PLACE DAM AS DIRECTED BY THE ENGINEER.
2). THE CHECK DAM HEIGHT MUST NOT EXCEED 2' (600) AT THE CENTER OF THE WEIR.
3). THE CHECK DAM IS TO BE CONSTRUCTED SO THAT THE CENTER IS 6" (150) MIN. LOWER THAN THE OUTER EDGES, FORMING A WEIR THAT WATER CAN FLOW ACROSS.
4). GEOTEXTILE FABRIC IS TO BE INSTALLED UNDERNEATH RIPRAP ON PERMANENT CHECK DAMS ONLY.
5). THE MAXIMUM SPACING BETWEEN DAMS SHALL BE THE DISTANCE IN THE DITCH WHERE THE TOE OF THE UPSTREAM DAM IS AT THE SAME ELEVATION AS THE TOP OF THE DOWNSTREAM DAM AT THE CENTER OF THE WEIR.

DELAWARE DEPARTMENT OF TRANSPORTATION	STONE CHECK DAM		APPROVED CHIEF ENGINEER — DATE 10/10/06
	STANDARD NO. E-5 (2006)	SHT. 1 OF 1	RECOMMENDED DESIGN ENGINEER — DATE 10/9/06

08/14/2006

SCALE : N.T.S.

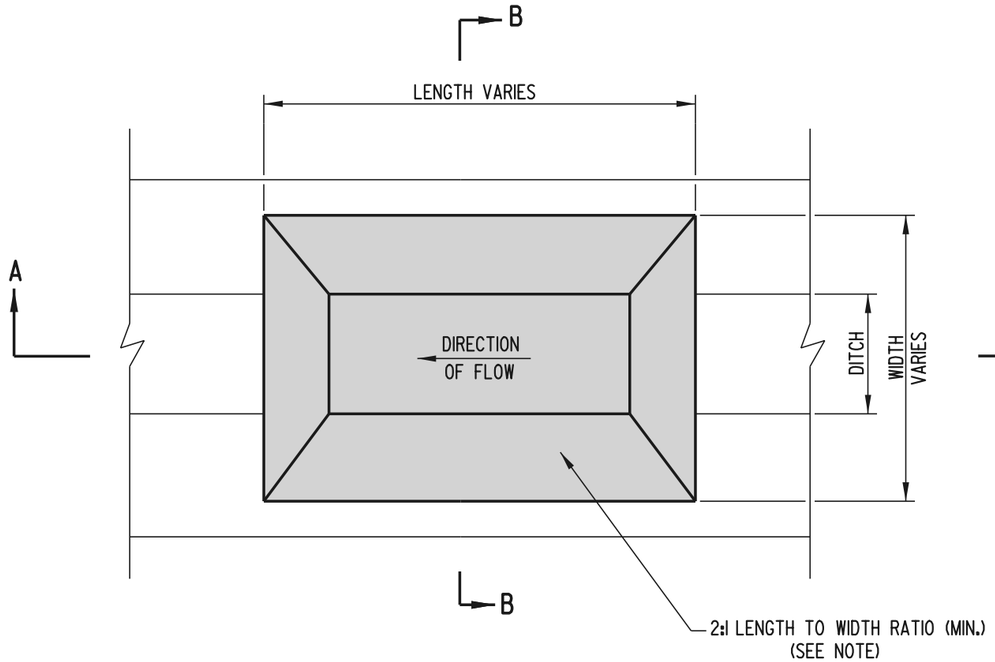

PLAN

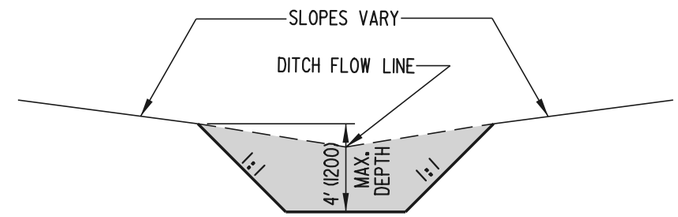

SECTION B-B

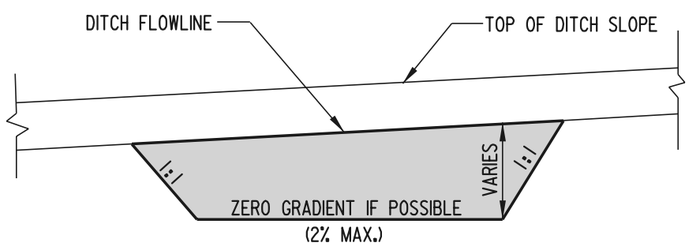

SECTION A-A

NOTES:

1). SEDIMENT TRAPS ARE INTENDED FOR USE IN EXISTING, PROPOSED, AND TEMPORARY DITCHES OF ALL TYPES WITH A MAXIMUM DRAINAGE AREA OF 15 ACRES (6 HECTARES), AS SHOWN ON PLANS OR AS DIRECTED BY THE ENGINEER.

2). SIDE SLOPES SHALL BE STABILIZED WITH "TEMPORARY GRASS SEEDING, DRY GROUND" AND STRAW MULCH.

3). AN OUTLET STRUCTURE IS REQUIRED. STONE CHECK DAMS, PERFORATED RISER PIPES, SKIMMER DEWATERING DEVICES, OR DRAINAGE INLETS MAY BE USED. SEE APPROPRIATE STANDARD SHEET FOR ADDITIONAL INFORMATION.

4). FOR SIZE, LOCATION, ETC. OF SEDIMENT TRAP, SEE CONSTRUCTION PHASING, M.O.T., AND EROSION CONTROL PLANS.

5). ALL FILL SLOPES SHALL BE 2:1.

6). A 2:1 LENGTH TO WIDTH RATIO SHOULD BE ACHIEVED WHERE POSSIBLE. IF THIS IS NOT POSSIBLE, THE USE OF BAFFLES OR OTHER SPECIAL DESIGNS SHOULD BE INCORPORATED TO INCREASE FLOW TIME.

PLAN SYMBOL

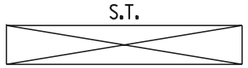

DELAWARE DEPARTMENT OF TRANSPORTATION	SEDIMENT TRAP			APPROVED CHIEF ENGINEER DATE 6/18/01
	STANDARD NO. E-6 (2001)	SHT. 1 OF 1		RECOMMENDED DESIGN ENGINEER DATE 6/15/01

04/17/2001

SCALE : N.T.S.

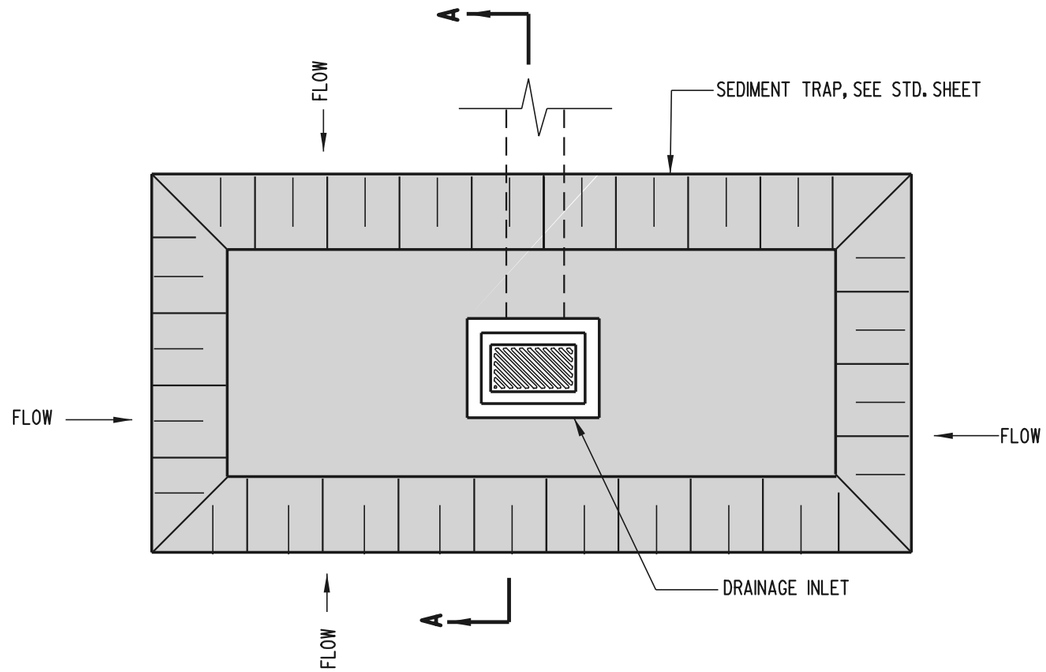

PLAN

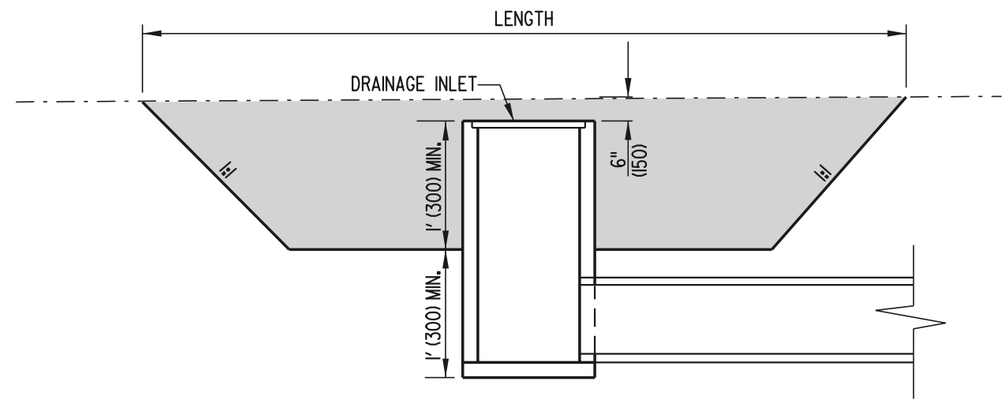

SECTION A-A

NOTES:

1). THE WORK SHALL CONSIST OF THE CONSTRUCTION OF A SEDIMENT TRAP AROUND A DRAINAGE INLET TO ALLOW SEDIMENTATION TO OCCUR BEFORE RUNOFF ENTERS THE DRAINAGE INLET.

2). DRAINAGE INLET SEDIMENT TRAPS SHALL BE LIMITED TO A THREE (3) ACRE (1.2 HECTRARE) MAXIMUM DRAINAGE AREA.

3). THE DIMENSIONS OF THE DRAINAGE INLET SEDIMENT TRAP ARE TO BE AS INDICATED ON THE PLANS OR AS DIRECTED BY THE ENGINEER.

PLAN SYMBOL

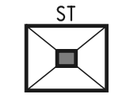

DELAWARE DEPARTMENT OF TRANSPORTATION	SEDIMENT TRAP, USING DRAINAGE INLET AS OUTLET		APPROVED CHIEF ENGINEER DATE 6/18/01
	STANDARD NO. E-7 (2001)	SHT. 1 OF 1	RECOMMENDED DESIGN ENGINEER DATE 6/15/01

05/21/2001

SCALE : N.T.S.

MIN. ✳ OUTFALL PIPE DIA.	MIN. RISER DIA.	MAX. DRAINAGE AREA ACRES (ha)
12" (300)	15" (375)	1 (0.4)
15" (375)	18" (450)	2 (0.8)
18" (450)	21" (525)	3 (1.2)
21" (525)	24" (600)	4 (1.6)
24" (600)	27" (675)	5 (2.0)

✳ OUTFALL PIPE DIAMETER MAY BE SAME SIZE AS RISER DIAMETER.

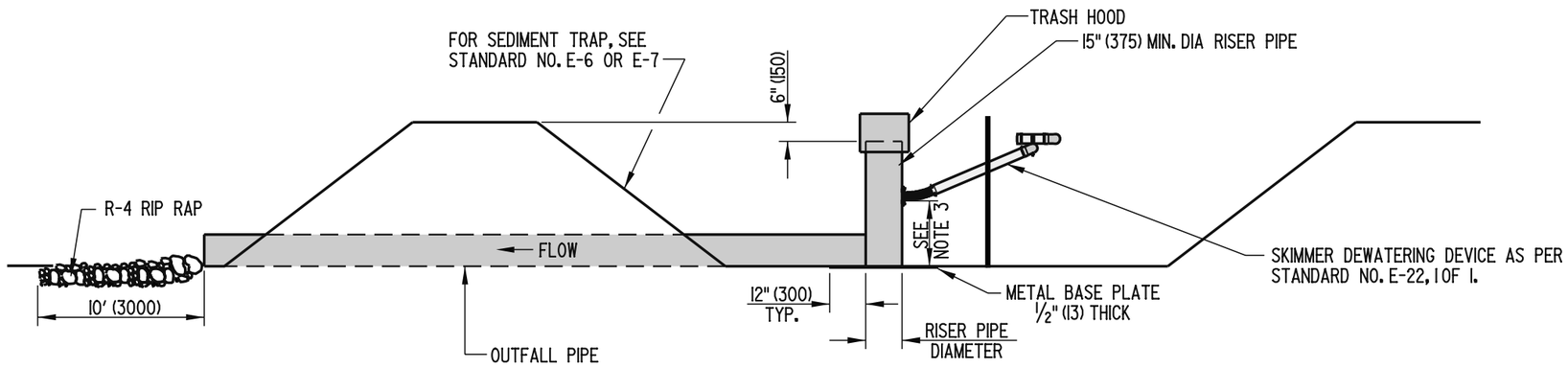

ELEVATION

NOTES:

1). THIS DEVICE IS INTENDED TO BE USED AS AN OUTLET FOR SEDIMENT TRAPS.
2). THE PIPE OUTLET SHOWN SHALL ONLY BE USED WITH SEDIMENT TRAPS WITH DRAINAGE AREAS OF 5 ACRES (2.0 HECTARES) OR LESS. LARGER DRAINAGE AREAS REQUIRE AN ENGINEERED DESIGN.
3). THE HEIGHT OF THE SKIMMER DEWATERING DEVICE SHALL BE SPECIFIED BY THE ENGINEER IN THE FIELD.

DELAWARE DEPARTMENT OF TRANSPORTATION	RISER PIPE ASSEMBLY FOR SEDIMENT TRAP		APPROVED CHIEF ENGINEER — DATE 10/10/06
	STANDARD NO. E-8 (2006)	SHT. 1 OF 2	RECOMMENDED DESIGN ENGINEER — DATE 10/9/06

10/02/2006

SCALE : N.T.S.

TRASH HOOD CHART					
RISER PIPE DIAMETER	D	H	TRASH HOOD THICK. (GAGE)	MINIMUM SIZE SUPPORT BAR	MINIMUM TOP THICK. (GAGE)
15" (375)	21" (525)	7" (175)	16 (1.6)	#6 (#19) REBAR	16 (1.6)
18" (450)	27" (675)	8" (200)	16 (1.6)	#6 (#19) REBAR	16 (1.6)
21" (525)	30" (750)	11" (275)	16 (1.6)	#6 (#19) REBAR	16 (1.6)
24" (600)	36" (900)	13" (330)	16 (1.6)	#6 (#19) REBAR	14 (2.0)
27" (675)	42" (1050)	15" (380)	16 (1.6)	#6 (#19) REBAR	14 (2.0)
36" (900)	54" (1350)	17" (430)	14 (2.0)	#8 (#25) REBAR	12 (2.7)

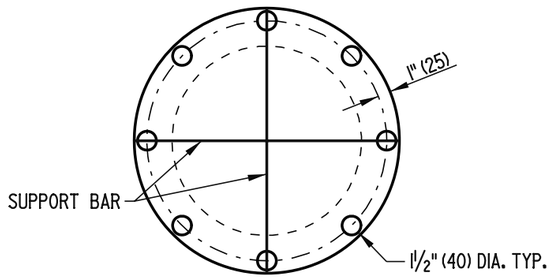

PLAN

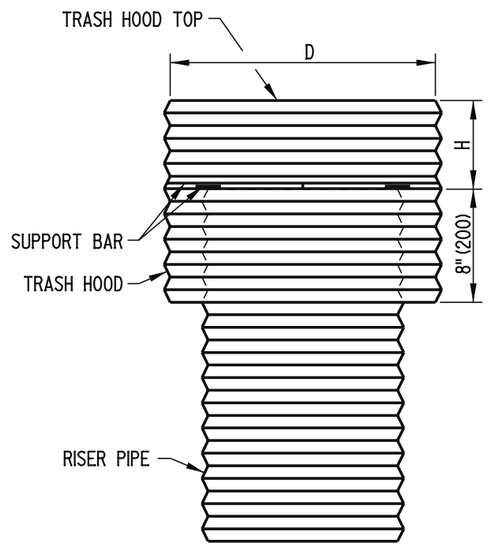

FRONT

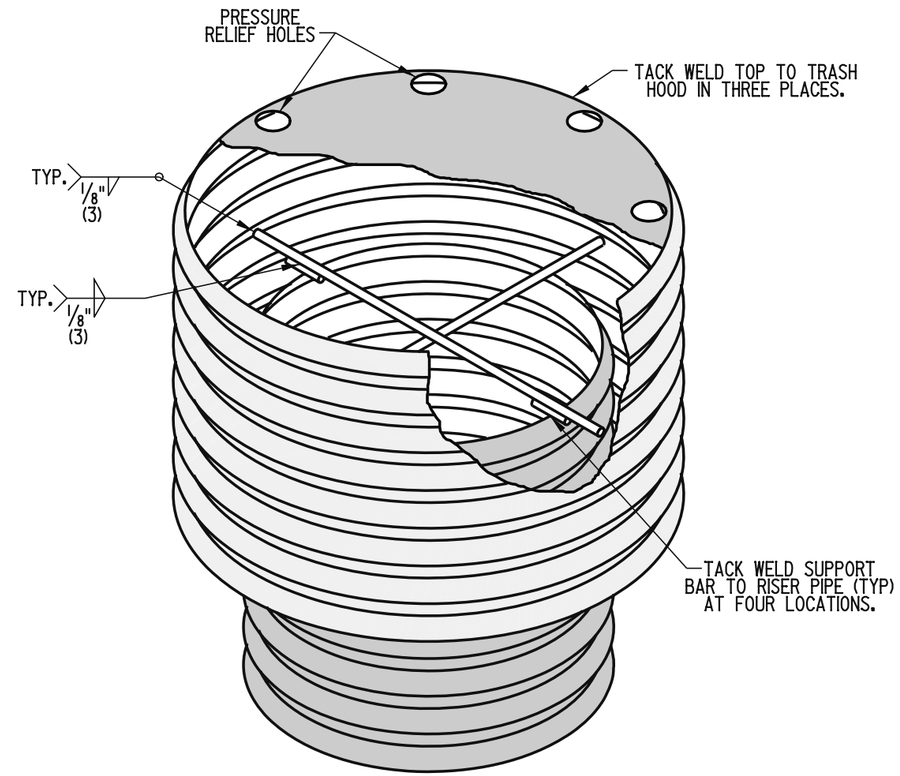

ISOMETRIC VIEW

TRASH HOOD DETAILS

DELAWARE DEPARTMENT OF TRANSPORTATION	RISER PIPE ASSEMBLY FOR SEDIMENT TRAP		APPROVED CHIEF ENGINEER DATE 10/10/06
	STANDARD NO. E-8 (2006)	SHT. 2 OF 2	RECOMMENDED DESIGN ENGINEER DATE 10/9/06

10/02/2006

SCALE : N.T.S.

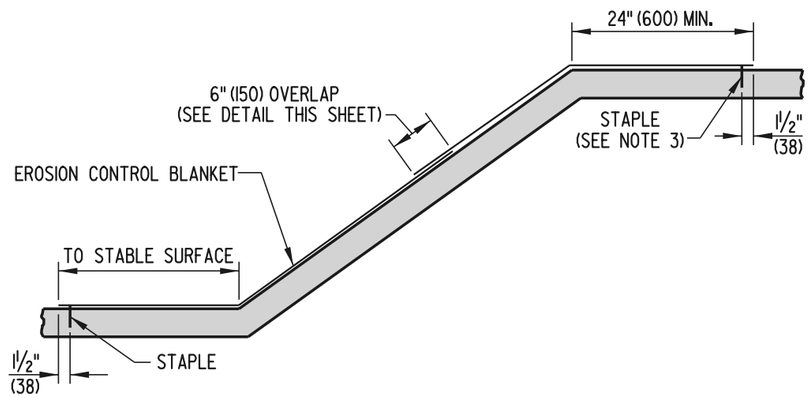

STABILIZATION OF EMBANKMENTS

NOTES: 1. STAPLES TO BE STAGGERED AT 18" (450) SPACING.
2. TOPSOIL UNDER EROSION CONTROL BLANKET IS TO BE TRACKED AND SEEDED.
3. WHEN OFFSITE RUNOFF OCCURS, ADDITIONAL MEASURES AS DIRECTED BY THE ENGINEER SHALL BE USED TO ENSURE STABILITY OF EMBANKEMENT.

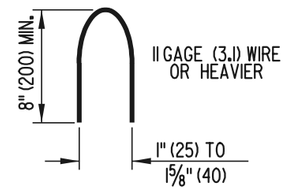

STAPLE DETAIL

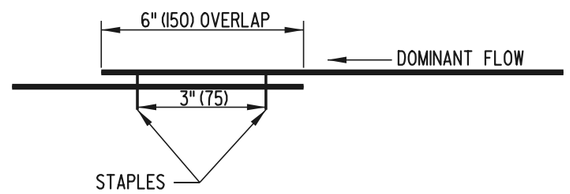

OVERLAP DETAIL

STAPLES TO BE STAGGERED AT 6" (150) SPACING.

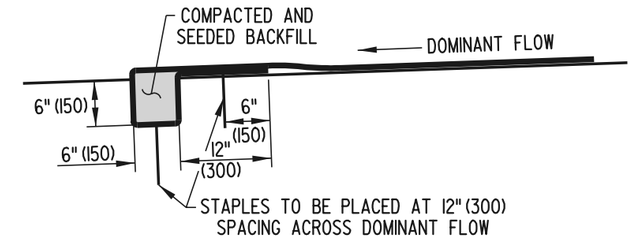

INITIAL TRENCH ANCHOR DETAIL

APPLIED AT THE DOWNSTREAM END OF DITCH

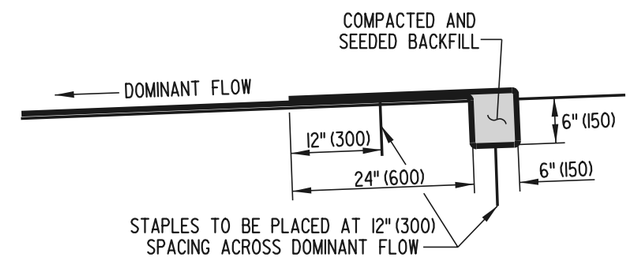

TERMINAL TRENCH ANCHOR DETAIL

APPLIED AT THE UPSTREAM END OF DITCH

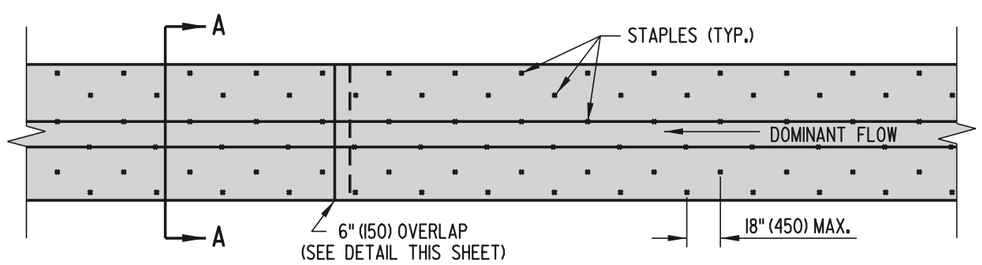

STABILIZATION OF DITCHES
PLAN

NOTES: 1. ADDITIONAL STAPLES NOT SHOWN ARE REQUIRED AT OVERLAPS. SEE OVERLAP DETAIL FOR STAPLE PLACEMENT.
2. STAPLES ARE TO BE STAGGERED.
3. TOPSOIL UNDER EROSION CONTROL BLANKET IS TO BE TRACKED AND SEEDED.

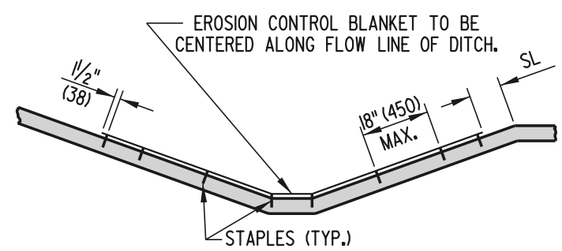

STABILIZATION OF DITCHES
SECTION A-A

STAPLES ALONG LONGITUDINAL EDGES SHALL BE SPACED AS FOLLOWS:
18" (450) WHEN SL ≤ 20' (6000)
9" (225) WHEN SL > 20' (6000)

PLAN SYMBOL

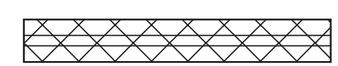

ECB

DELAWARE DEPARTMENT OF TRANSPORTATION	EROSION CONTROL BLANKET APPLICATIONS		APPROVED [signature] CHIEF ENGINEER 6/18/01 DATE
	STANDARD NO. E-9 (2001)	SHT. 1 OF 1	RECOMMENDED [signature] DESIGN ENGINEER 6/15/01 DATE

05/31/2001

SCALE : N.T.S.

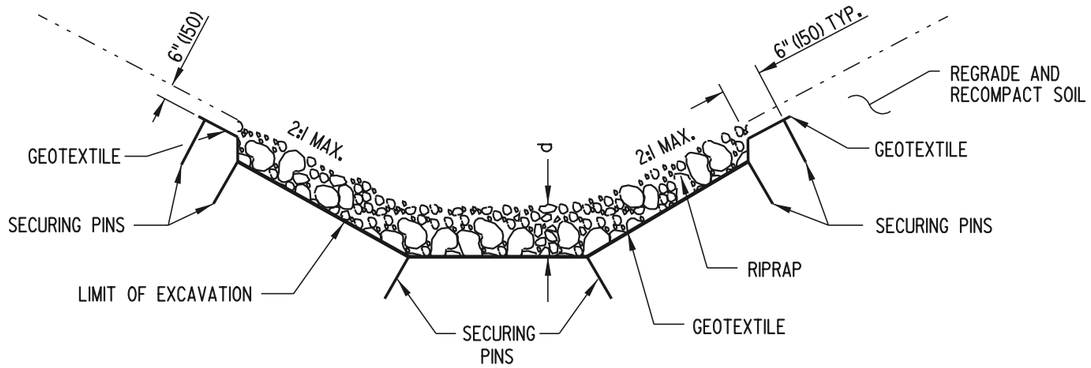

SECTION A-A

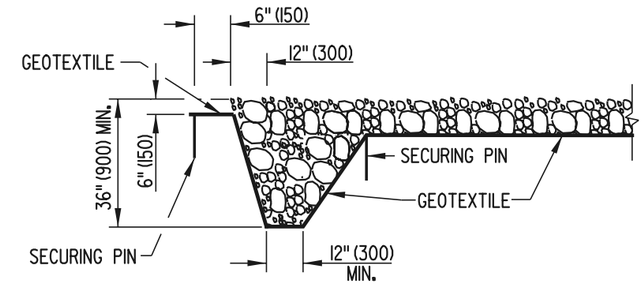

SECTION B-B

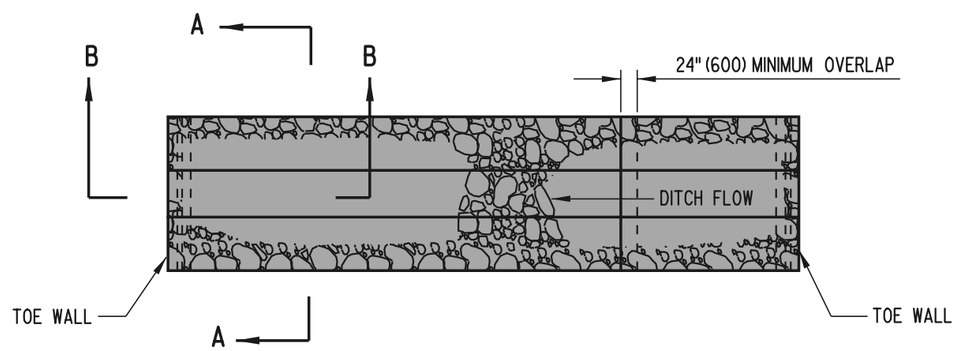

PLAN

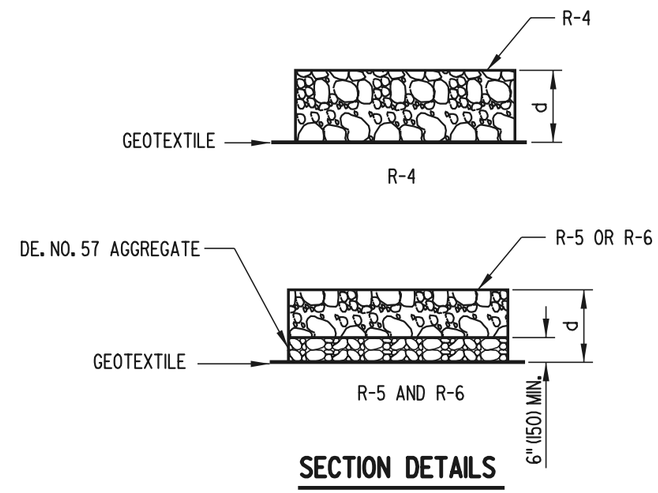

SECTION DETAILS

CLASS RIPRAP

R-4 d = 14" (350) MIN.

R-5 d = 26" (650) MIN.

R-6 d = 34" (850) MIN.

NOTES:

1). SECURING PINS ARE TO BE PLACED AT LOCATIONS SHOWN AND AT 24" (600) LONGITUDINAL AND LATERAL SPACING.

2). SEE PLANS FOR LOCATION, DIMENSIONS, GRADES, ETC.

3). USE OF R-7 RIPRAP WILL REQUIRE A SEPARATE PROFESSIONAL ENGINEERING DESIGN FOR SIGHT SPECIFIC CONDITIONS.

PLAN SYMBOL

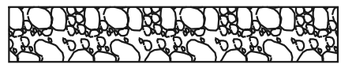

DELAWARE DEPARTMENT OF TRANSPORTATION	RIPRAP DITCH			APPROVED CHIEF ENGINEER DATE 6/18/01
	STANDARD NO. E-10 (2001)	SHT. 1 OF 1		RECOMMENDED DESIGN ENGINEER DATE 6/15/01

05/31/2001

SCALE : N.T.S.

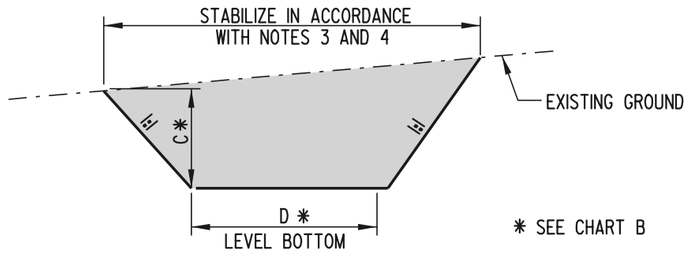

SECTION A-A

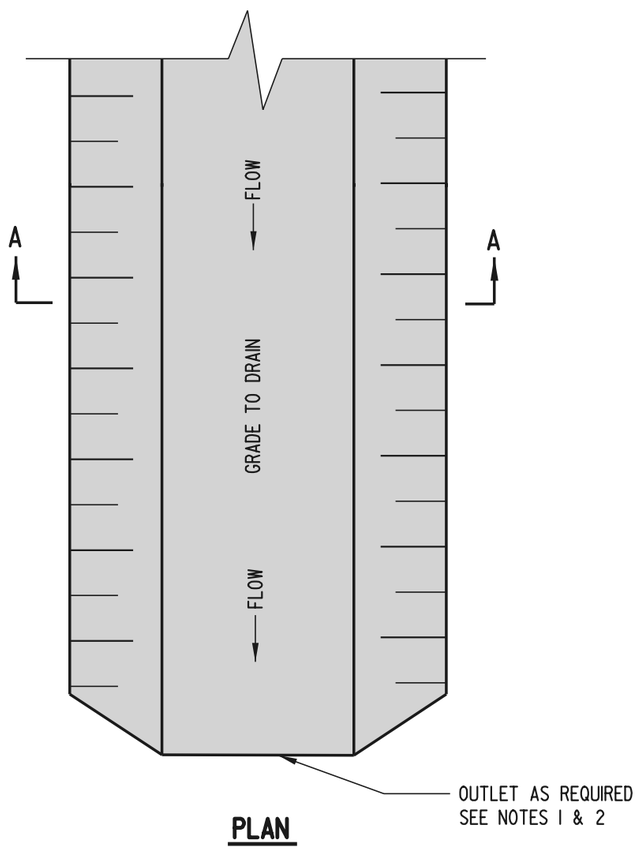

PLAN

CHART A - STABILIZATION			
SYMBOL	SWALE GRADE	TYPE OF TREATMENT	
		DRAINAGE AREA A (5 AC (2 ha) OR LESS)	DRAINAGE AREA B (5 AC - 10 AC (2 ha - 4 ha))
1	0.5-2.0%	SEED USED WITH EROSION CONTROL BLANKET	SEED USED WITH EROSION CONTROL BL.
2	2.1-8.0%	R-4 RIRRAP	R-4 RIRRAP
3	8.1-20%	ENGINEERED DESIGN	ENGINEERED DESIGN

CHART B - SWALE DIMENSIONS		
SYMBOL	SWALE A	SWALE B
C	1' (300) MIN.	1' (300) MIN.
D	4' (1200) MIN.	6' (1800) MIN.

SEE SECTION A - A

NOTES:

1). DIVERTED RUNOFF FROM A DISTURBED AREA SHALL BE CONVEYED TO A SEDIMENT TRAPPING DEVICE.

2). DIVERTED RUNOFF FROM AN UNDISTURBED AREA SHALL OUTLET DIRECTLY INTO AN UNDISTURBED STABILIZED AREA AT NON-EROSIVE VELOCITY.

3). IF TEMPORARY SWALES OR CLEAN WATER DIVERSIONS ARE TO BE OPERATIONAL FOR MORE THAN 14 DAYS, THEY SHALL BE STABILIZED IN ACCORDANCE WITH CHART A PRIOR TO BECOMING OPERATIONAL.

4). IF TEMPORARY SWALES OR CLEAN WATER DIVERSIONS ARE TO BE OPERATIONAL FOR LESS THAN 14 DAYS, THEY SHALL BE STABILIZED WITH GEOTEXTILE IN ACCORDANCE WITH THE STANDARD DETAIL, "GEOTEXTILE-LINED CHANNEL DIVERSION".

PLAN SYMBOL

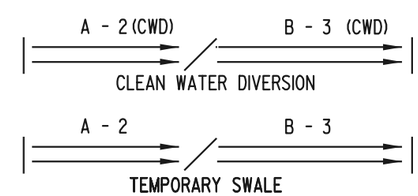

DELAWARE DEPARTMENT OF TRANSPORTATION	TEMPORARY SWALE		APPROVED [signature] CHIEF ENGINEER 6/18/01 DATE
	STANDARD NO. E-11 (2001)	SHT. 1 OF 1	RECOMMENDED [signature] DESIGN ENGINEER 6/15/01 DATE

04/17/2001

SCALE : N.T.S.

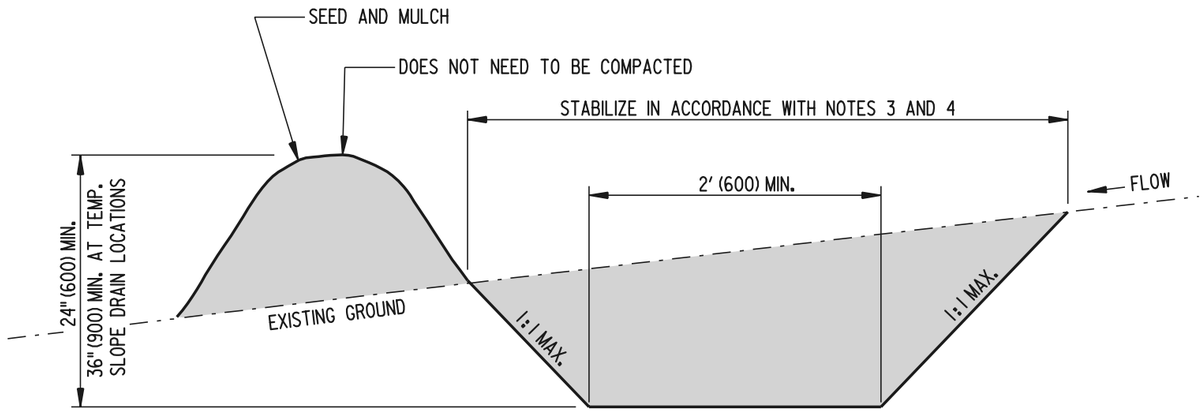

SECTION A-A

CHART A - SWALE STABILIZATION		
SYMBOL	SWALE GRADE	TYPE OF TREATMENT
A-1	0.5-2.0%	SEED AND EROSION CONTROL BLANKET
A-2	2.1-8.0%	LINED R-4 RIPRAP
A-3	8.1-20%	ENGINEERED DESIGN

MAXIMUM DRAINAGE AREA: 2 ACRES (0.8 ha)

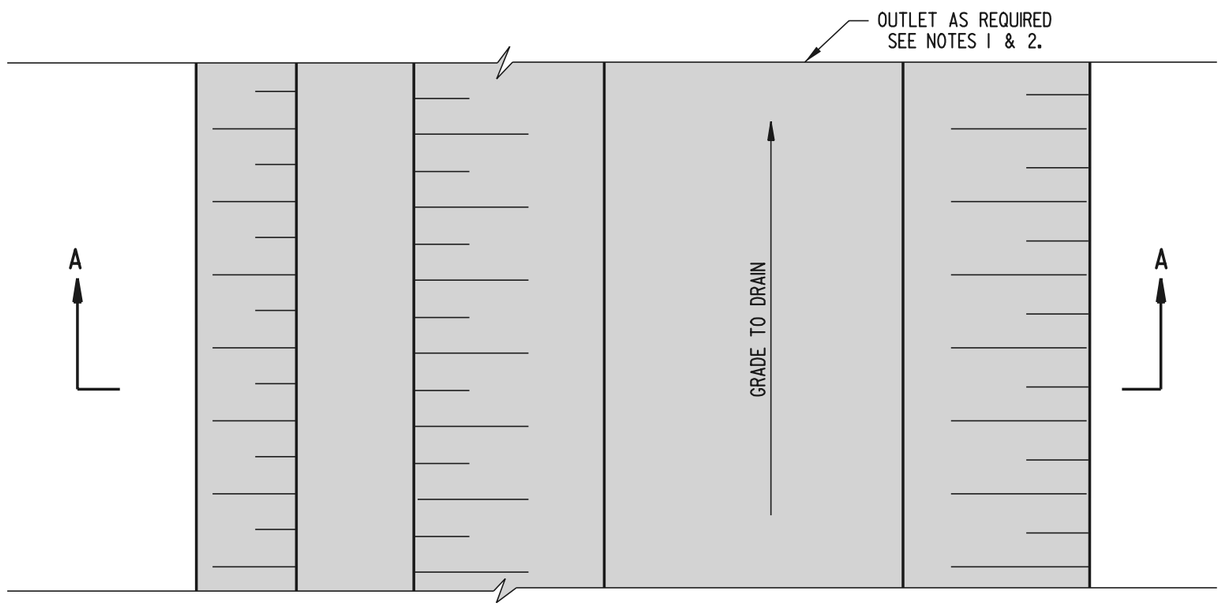

PLAN

NOTES:

1). DIVERTED RUNOFF FROM A DISTURBED AREA SHALL BE CONVEYED TO A SEDIMENT TRAPPING DEVICE.

2). DIVERTED RUNOFF FROM AN UNDISTURBED AREA SHALL OUTLET INTO AN UNDISTURBED STABILIZED AREA AT NON-EROSIVE VELOCITY.

3). IF PERIMETER DIKE SWALES ARE TO BE OPERATIONAL FOR MORE THAN 14 DAYS, THEY SHALL BE STABILIZED IN ACCORDANCE WITH CHART A PRIOR TO BECOMING OPERATIONAL.

4). IF TEMPORARY SWALES OR CLEAN WATER DIVERSIONS ARE TO BE OPERATIONAL FOR LESS THAN 14 DAYS, THEY SHALL BE STABILIZED WITH GEOTEXTILE IN ACCORDANCE WITH THE STANDARD DETAIL, "GEOTEXTILE-LINED CHANNEL DIVERSION".

PLAN SYMBOL

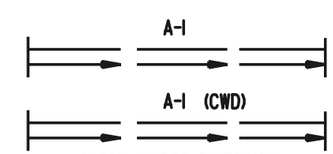

CLEAN WATER DIVERSION

DELAWARE DEPARTMENT OF TRANSPORTATION	PERIMETER DIKE / SWALE			APPROVED	CHIEF ENGINEER — DATE 6/18/01
	STANDARD NO. E-12 (2001)	SHT. 1	OF 1	RECOMMENDED	DESIGN ENGINEER — DATE 6/15/01

04/17/2001

SCALE : N.T.S.

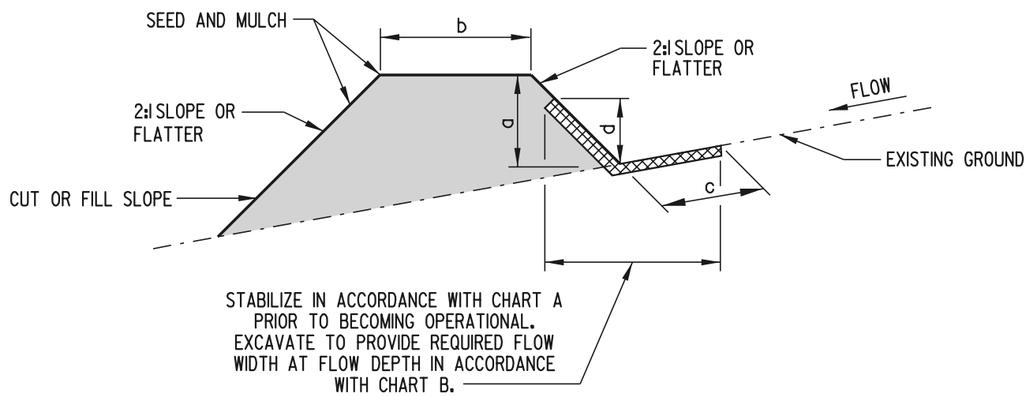

SECTION A-A

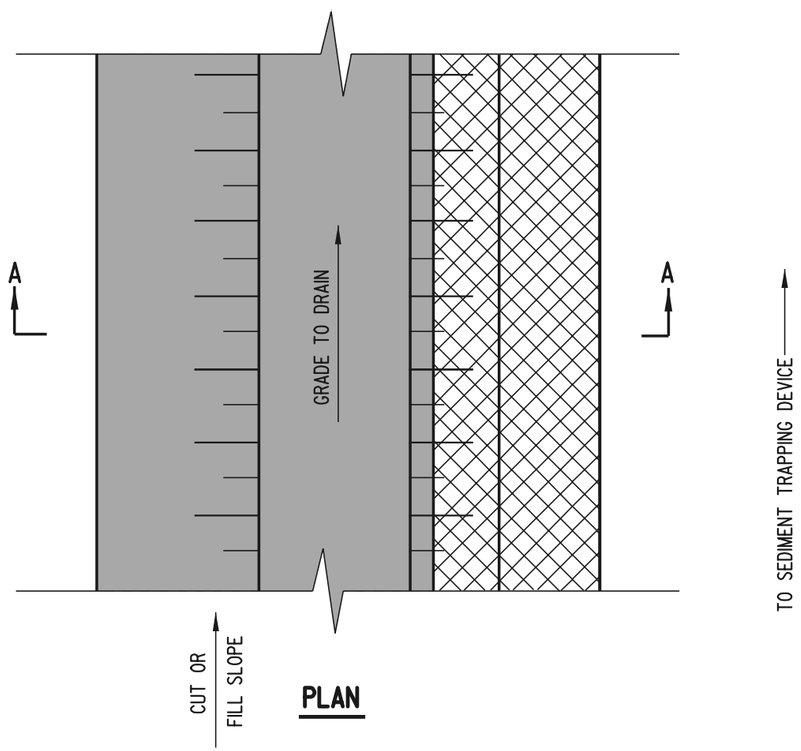

PLAN

CHART A - FLOW CHANNEL STABILIZATION		
TYPE	CHANNEL GRADE	TYPE OF TREATMENT
1	0.5-2.0%	SEED AND EROSION CONTROL BLANKET
2	2.1-8.0%	R-4 RIPRAP
3	8.1-20%	ENGINEERED DESIGN

CHART B - EARTH DIKE DIMENSIONS		
SYMBOL	DIKE A (5 ac (2 ha) or less)	DIKE B (5-10ac(2-4 ha))
a-DIKE HEIGHT	12" (300)	18" (450)
b-DIKE WIDTH	12" (300)	24" (600)
c-FLOW WIDTH	48" (1200)	72" (1800)
d-FLOW DEPTH	14" (350)	27" (680)

NOTES: 1). IF DESIRED, TOP WIDTH MAY BE WIDER AND SIDE SLOPES MAY BE FLATTER TO FACILITATE CROSSING BY CONSTRUCTION TRAFFIC.

2). FIELD LOCATION SHOULD BE ADJUSTED AS NEEDED TO INSURE A STABILIZED OUTFALL.

PLAN SYMBOL

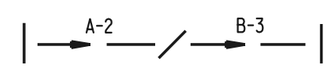

DELAWARE DEPARTMENT OF TRANSPORTATION	EARTH DIKE				APPROVED [signature] CHIEF ENGINEER 6/18/01 DATE
	STANDARD NO.	E-13 (2001)	SHT. 1	OF 1	RECOMMENDED [signature] DESIGN ENGINEER 6/15/01 DATE

04/17/2001

SCALE : N.T.S.

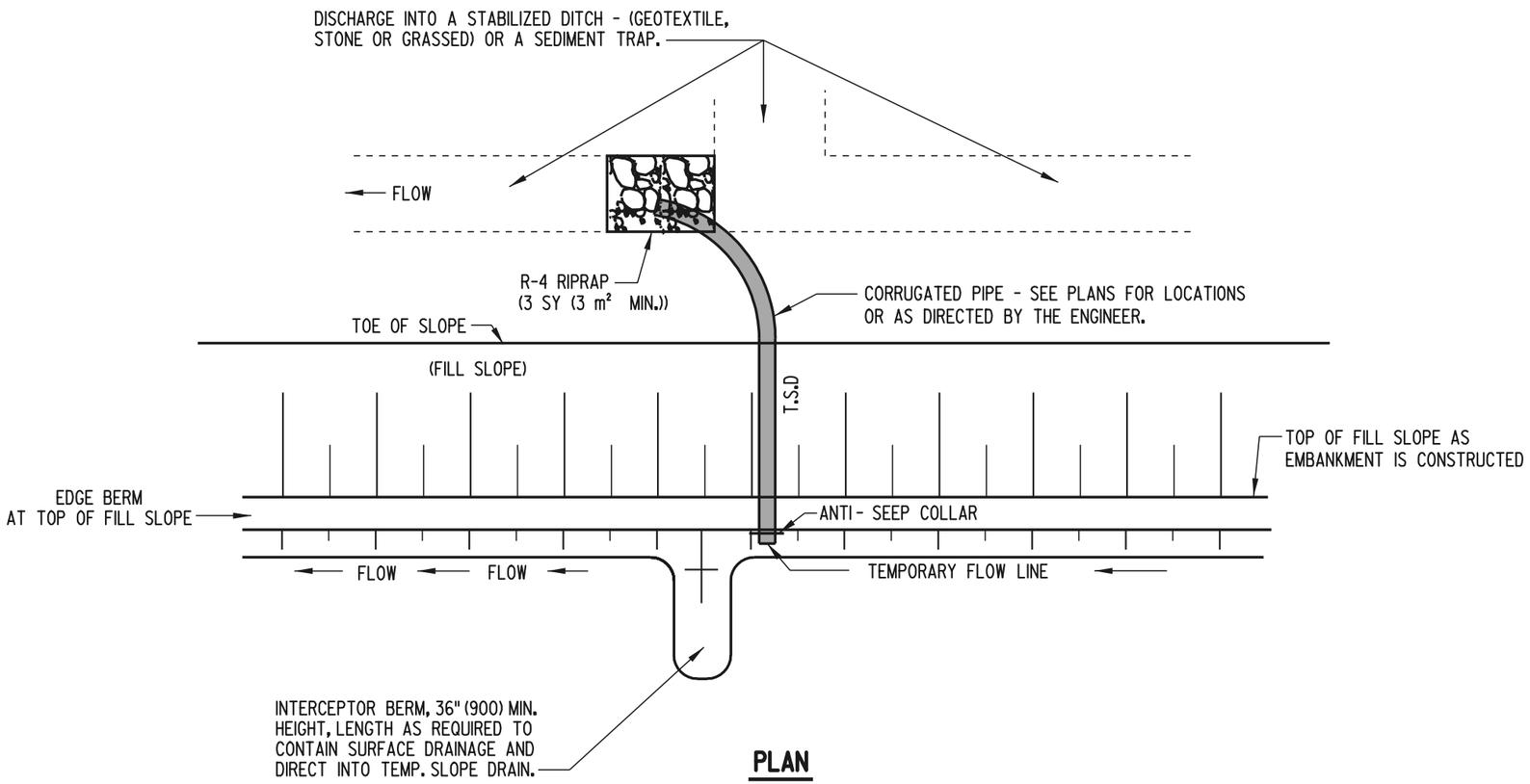

PLAN

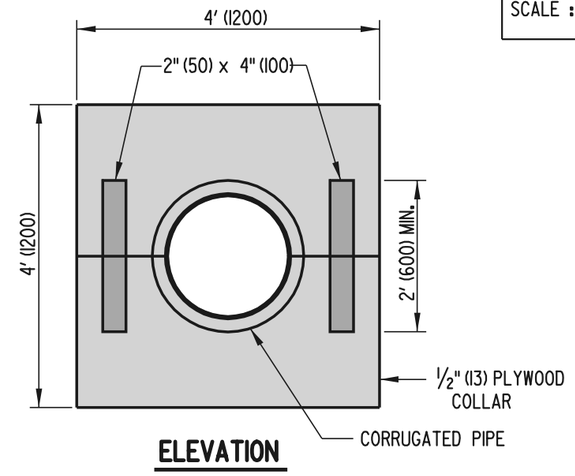

ELEVATION

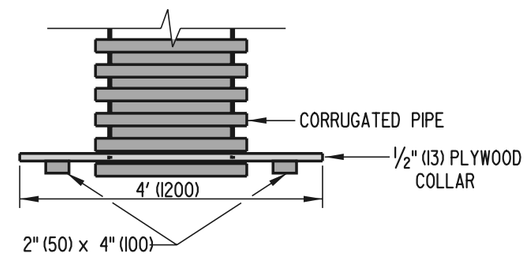

PLAN

ANTI-SEEP COLLAR

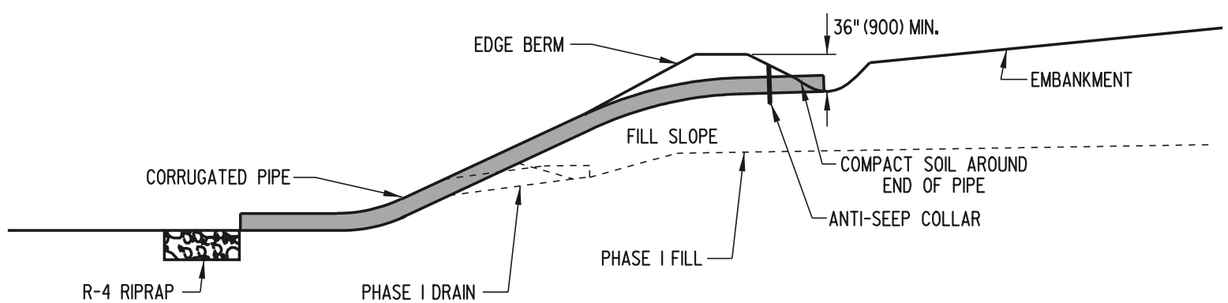

SLOPE DRAIN PROFILE

(FOR FILL SLOPES)

NOTES: 1). ALL TEMPORARY SLOPE DRAINS SHALL DISCHARGE INTO THE BACK OF SEDIMENT TRAPS, INTO SEDIMENT BASINS OR DITCHES DISCHARGING INTO TRAPS OR BASINS.

2). TEMPORARY SLOPE DRAINS SHALL BE USED AT THE TOP OF FILL SLOPES AS EMBANKMENT IS CONSTRUCTED, TO PREVENT EXCESSIVE EROSION UNTIL SHOULDERS ARE CONSTRUCTED AND THE SLOPES ARE SEEDED AND MULCHED.

PLAN SYMBOL

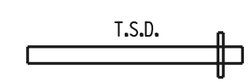

DELAWARE DEPARTMENT OF TRANSPORTATION	TEMPORARY SLOPE DRAIN		APPROVED [signature] CHIEF ENGINEER 6/18/01 DATE
	STANDARD NO. E-14 (2001)	SHT. 1 OF 1	RECOMMENDED [signature] DESIGN ENGINEER 6/15/01 DATE

05/21/2001

SCALE : N.T.S.

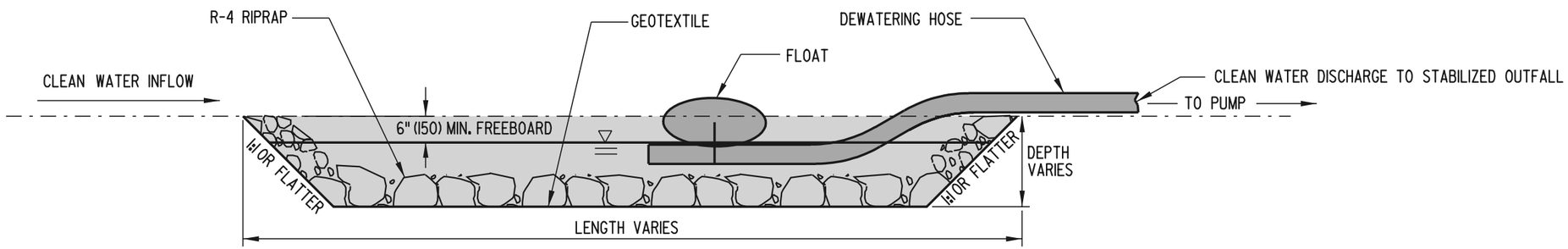

NOTES: 1). THE WORK SHALL CONSIST OF CONSTRUCTING A STILLING WELL FOR THE PURPOSE OF PUMPING CLEAN WATER AROUND A DISTURBED CONSTRUCTION AREA TO A STABILIZED OUTFALL.

2). THE DIMENSIONS OF THE STILLING WELL SHALL BE AS SHOWN ON THE PLANS OR AS DIRECTED BY THE ENGINEER.

PLAN SYMBOL

DELAWARE DEPARTMENT OF TRANSPORTATION	STILLING WELL			APPROVED CHIEF ENGINEER DATE 6/18/01
	STANDARD NO. E-15 (2001)	SHT. 1	OF 1	RECOMMENDED DESIGN ENGINEER DATE 6/15/01

04/17/2001

SCALE : N.T.S.

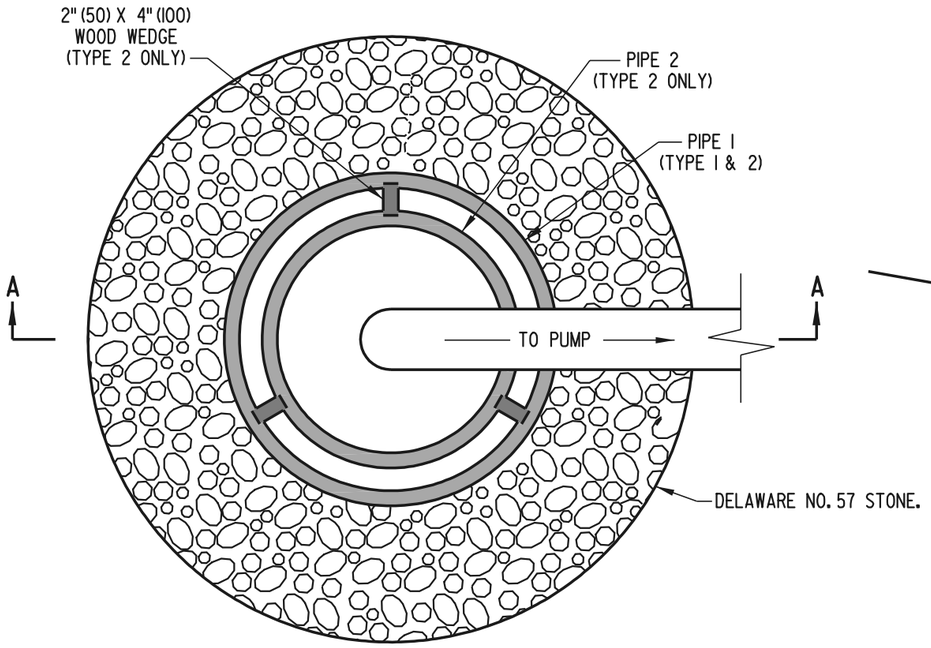

PLAN

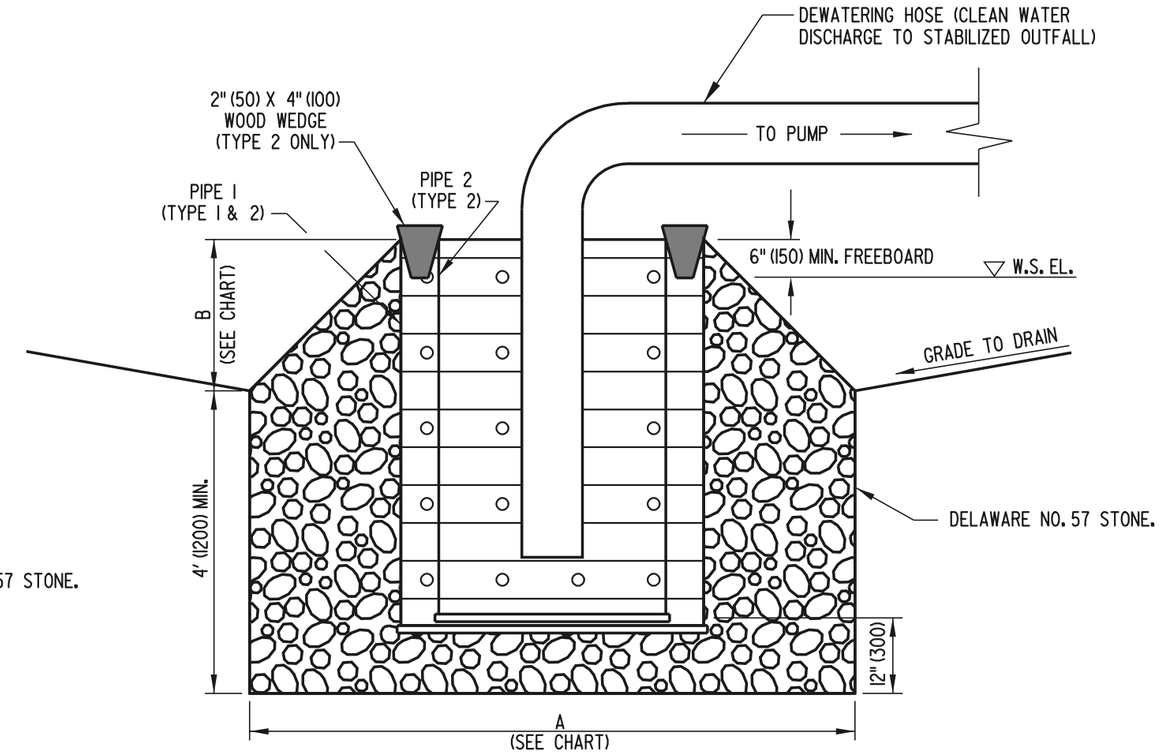

SECTION A-A

NOTES:

1). THE WORK SHALL CONSIST OF CONSTRUCTING A SUMP PIT FOR THE PURPOSE OF FILTERING AND PUMPING WATER TO A STABILIZED OUTFALL.

2). GEOTEXTILE FOR THE 36" (900) CMP SHALL BE REPLACED WHEN CLOGGED WITH SEDIMENT.

3). ½" x ½" (13 x 13) 19 GAGE (1.1) WIRE MESH SHALL BE PLACED AROUND THE REMOVABLE 36" (900) CMP BEFORE ATTACHING THE GEOTEXTILE TO INCREASE FLOW THROUGH THE GEOTEXTILE.

4). ALL PERFORATIONS SHALL BE 1" (25) IN DIAMETER AND 12" (300) ON CENTER IN ALL DIRECTIONS.

5). TYPE 1 SUMP PIT SHALL BE USED ONLY WHEN PUMPING IS NEEDED FOR LESS THAN 7 DAYS.

SUMP PIT CHART

TYPE	PIPE 1	PIPE 2	A	B
1	PERFORATED 24" (600) CMP WITH PERFORATED CAP WELDED ON BOTTOM AND COMPLETELY WRAPPED WITH GEOTEXTILE.	N/A	4' (1200) MIN.	12" (300)
2	PERFORATED 48" (1200) CMP WITH PERFORATED CAP WELDED ON BOTTOM	REMOVABLE PERFORATED 36" (900) CMP WITH PERFORATED CAP WELDED ON BOTTOM AND COMPLETELY WRAPPED WITH GEOTEXTILE.	8' (2400) MIN.	24" (600)

PLAN SYMBOL

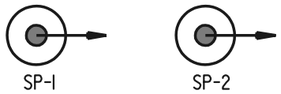

DELAWARE
DEPARTMENT OF TRANSPORTATION

SUMP PIT, TYPE 1 & 2

STANDARD NO. E-16 (2001) SHT. 1 OF 1

APPROVED [signature] CHIEF ENGINEER DATE 6/18/01

RECOMMENDED [signature] DESIGN ENGINEER DATE 6/15/01

05/21/2001

SCALE : N.T.S.

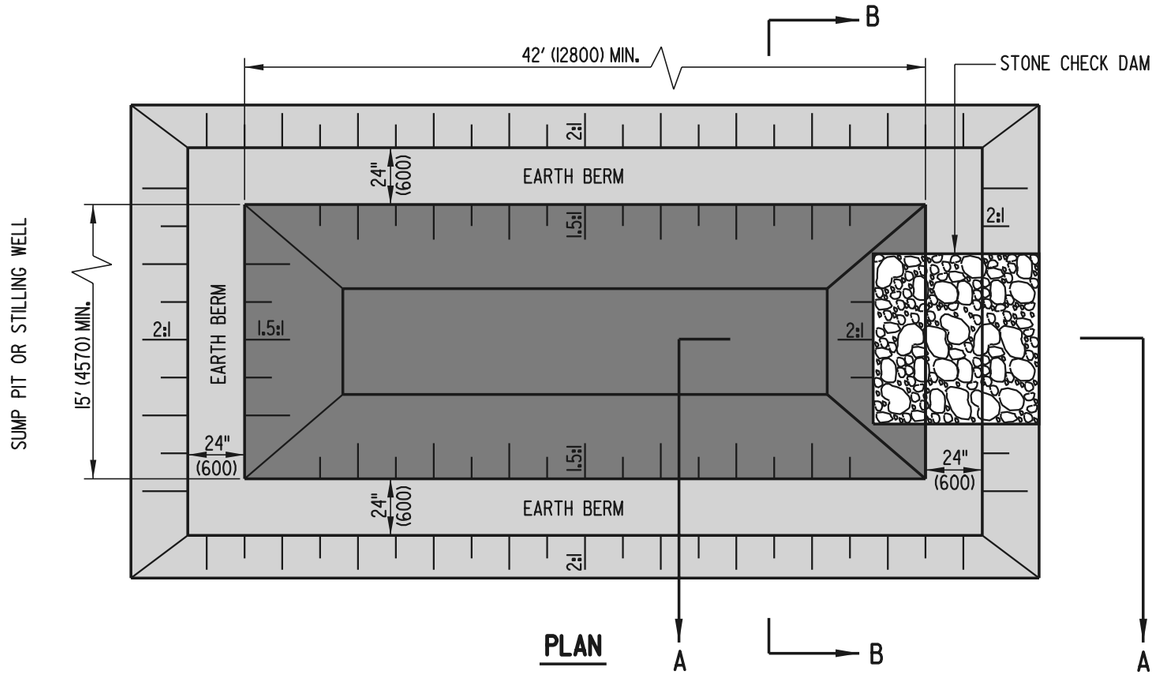

PLAN

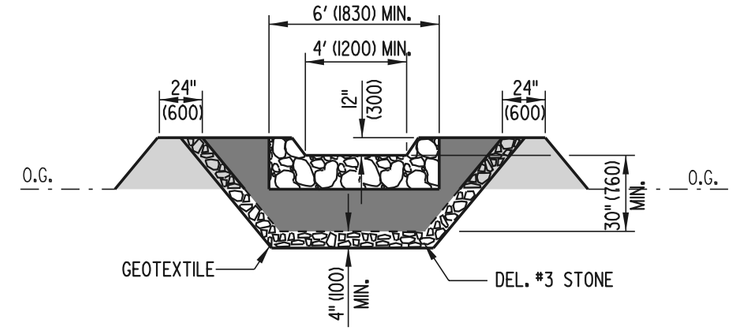

SECTION B-B

NOTES: 1.) A DEWATERING BASIN (DWB) IS USED TO REMOVE SEDIMENT FROM SEDIMENT-LADEN WATER PUMPED FROM A CONSTRUCTION SITE BEFORE THE WATER RE-ENTERS THE WATERWAY. THE DWB SHALL HAVE A MINIMUM TOP WIDTH OF 15' (4570) AND A MINIMUM DEPTH OF 3.5' (1065). THE MINIMUM TOP LENGTH SHOWN IN THE PLAN IS USED ONLY FOR QUANTITY CALCULATIONS BY THE ENGINEER. THE ACTUAL TOP LENGTH IN THE FIELD SHALL BE CALCULATED BY THE EQUATION:

US CUSTOMARY : TOP LENGTH (FEET) = 26' + .01 x Y
METRIC : TOP LENGTH (mm) = 7930 + 48300 x Y

WHERE Y IS THE MAXIMUM CAPACITY IN GALLONS PER MINUTE (CUBIC METERS PER SECOND) OF THE DEWATERING PUMP.

2.) THE OUTFALL FROM THE BASIN TO THE RECEIVING WATERS SHALL BE STABILIZED. PUMPING INTO THE DWB SHALL CEASE WHEN THE EFFLUENT FROM THE BASIN BECOMES SEDIMENT-LADEN.

3.) A SUMP PIT OR STILLING WELL (SEE STANDARD SHEETS) SHALL BE USED IN CONJUNCTION WITH A DWB. THE BASIN MAY BE BYPASSED INTO THE STABILIZED OUTFALL IF THE WATER BEING PUMPED IS NON-SEDIMENT-LADEN. DIRECT DISCHARGE TO THE RECEIVING WATERS SHALL CEASE AND BE REDIRECTED TO THE DWB WHEN EFFLUENT FROM THE PUMP BECOMES SEDIMENT-LADEN.

4.) MAINTENANCE MUST BE PERFORMED IN ORDER FOR THE DWB TO FUNCTION PROPERLY. ACCUMULATED SEDIMENT SHALL BE REMOVED AND DISPOSED OF IN AN APPROVED DISPOSAL AREA WHEN THE BASIN IS FILLED TO WITHIN 12" (300) FROM THE CREST.

5.) WHEN USED IN CONJUNCTION WITH A COFFERDAM, DEWATERING SHALL BEGIN NO SOONER THAN 12 HOURS AFTER COFFERDAM INSTALLATION IN ORDER TO ALLOW SEDIMENT PRODUCED DURING INSTALLATION TO SETTLE COMPLETELY.

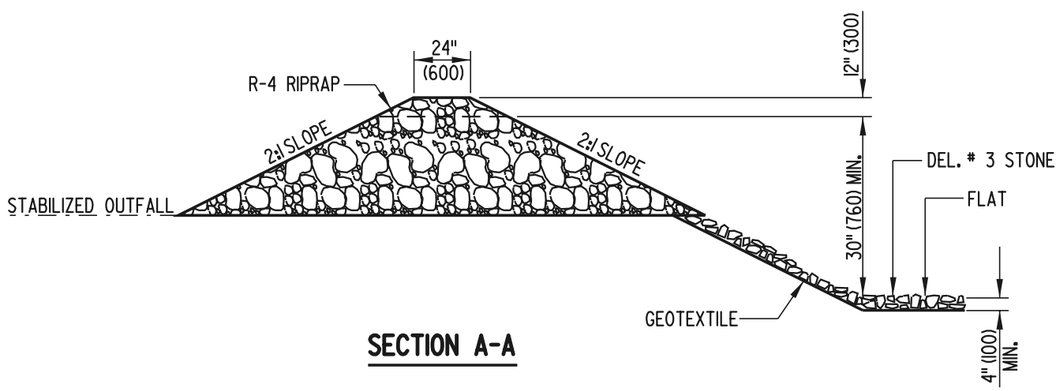

SECTION A-A

PLAN SYMBOL

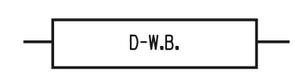

DELAWARE DEPARTMENT OF TRANSPORTATION	DEWATERING BASIN		APPROVED [signature] CHIEF ENGINEER 6/18/01 DATE
	STANDARD NO. E-17 (2001)	SHT. 1 OF 1	RECOMMENDED [signature] DESIGN ENGINEER 6/15/01 DATE

05/21/2001

SCALE : N.T.S.

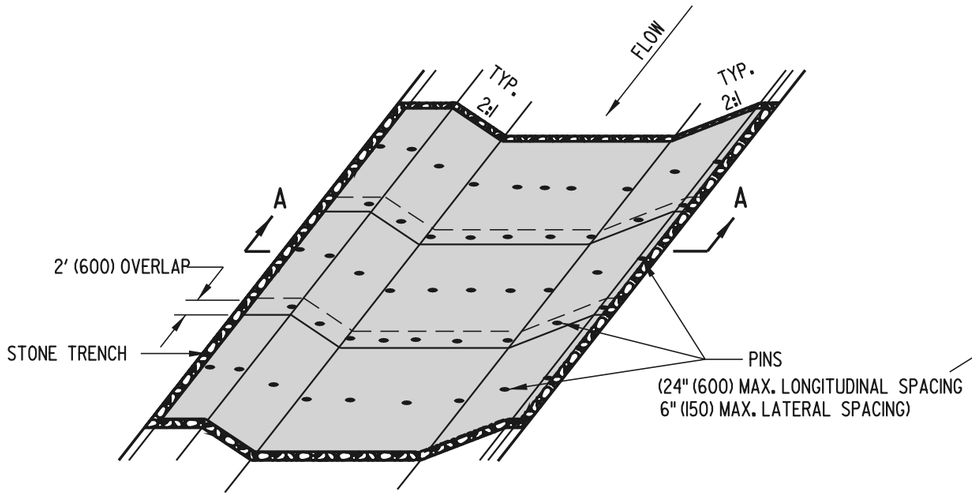

OBLIQUE VIEW

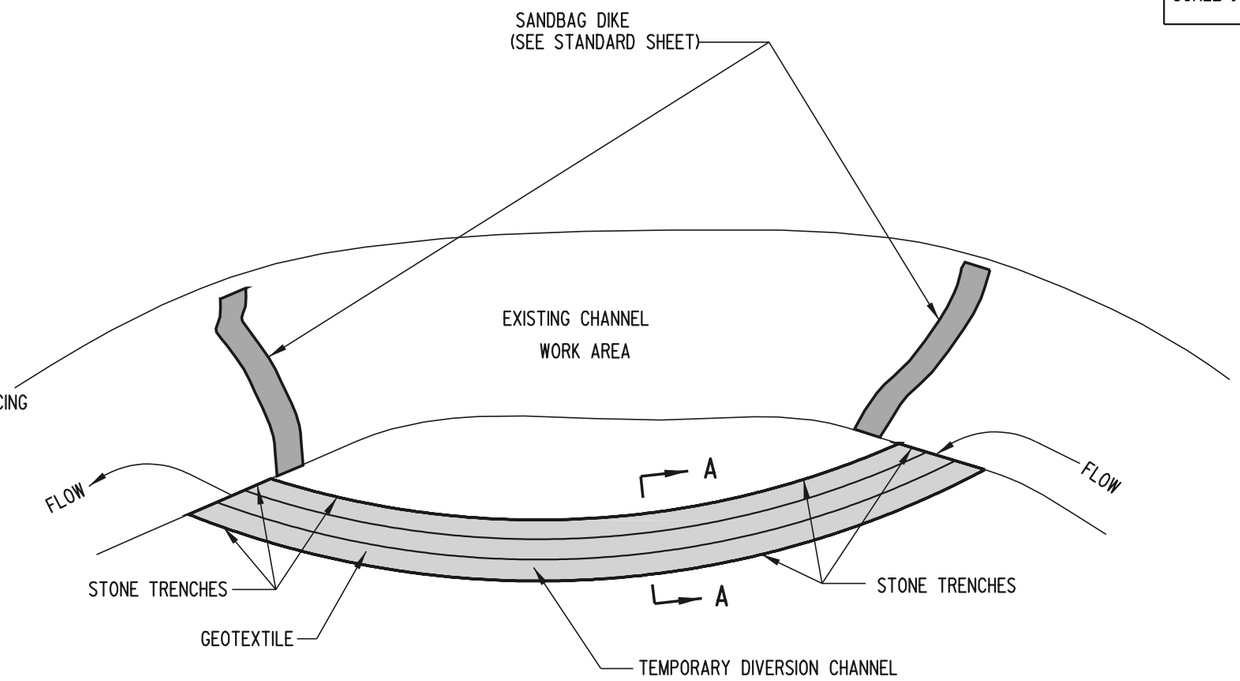

PLAN

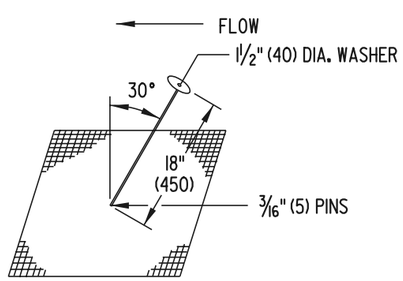

FASTENING DETAIL

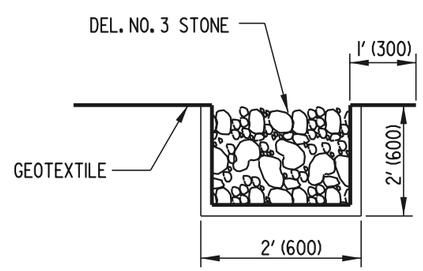

TRENCHING DETAIL

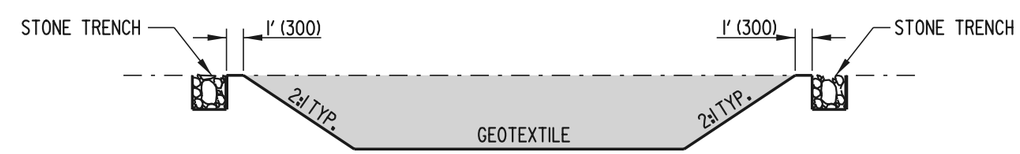

SECTION A-A

PLAN SYMBOL

NOTE: SEE PLANS FOR LOCATION, DIMENSIONS, GRADES, ETC.

DELAWARE DEPARTMENT OF TRANSPORTATION	GEOTEXTILE-LINED CHANNEL DIVERSION			APPROVED [signature] CHIEF ENGINEER 6/18/01 DATE
	STANDARD NO. E-18 (2001)	SHT. 1 OF 1		RECOMMENDED [signature] DESIGN ENGINEER 6/15/01 DATE

04/17/2001

SCALE : N.T.S.

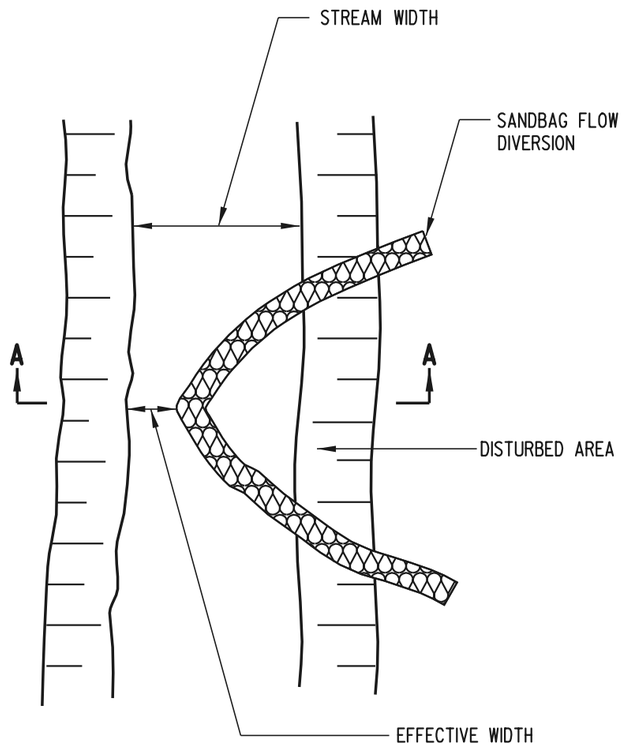

PLAN

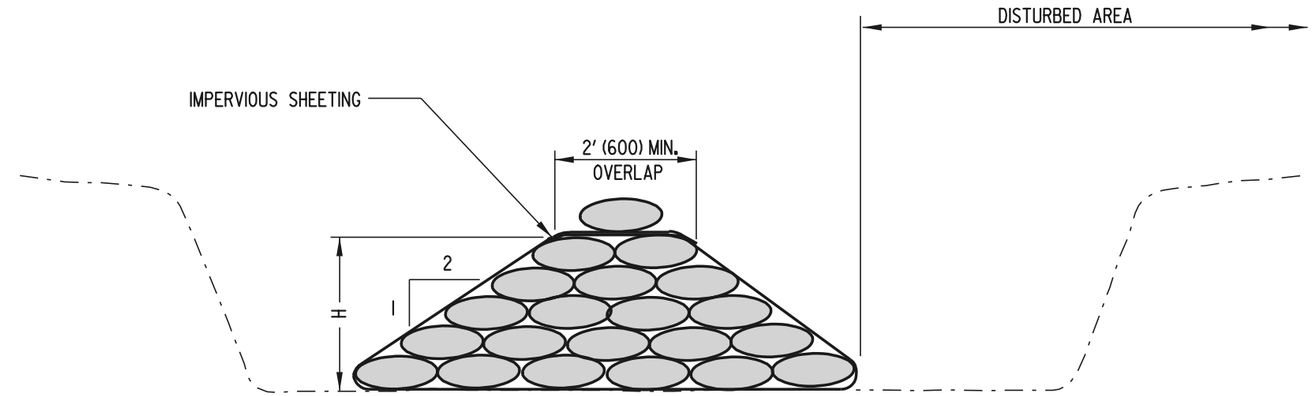

SECTION A-A

NOTES:

1). THE WORK SHALL CONSIST OF INSTALLING FLOW DIVERSIONS FOR THE PURPOSE OF EROSION CONTROL WHEN CONSTRUCTION ACTIVITIES TAKE PLACE WITHIN THE STREAM CHANNEL SUCH AS BANK STABILIZATION OR BRIDGE ABUTMENT CONSTRUCTION.

2). THE DIVERSION STRUCTURE SHALL BE INSTALLED FROM UPSTREAM TO DOWNSTREAM.

3). THE EFFECTIVE CHANNEL WIDTH SHALL BE SIZED TO PASS A ONE YEAR STORM EVENT PEAK FLOW, OR 1/3 OF STREAM WIDTH, WHICHEVER IS GREATER.

4). THE SANDBAG DIVERSION HEIGHT (H) SHALL BE 1' (300) ABOVE THE PEAK ELEVATION OF THE ONE YEAR STORM.

PLAN SYMBOL

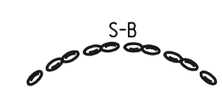

DELAWARE DEPARTMENT OF TRANSPORTATION	SANDBAG DIVERSION			APPROVED CHIEF ENGINEER DATE 6/18/01
	STANDARD NO. E-19 (2001)	SHT. 1 OF 1		RECOMMENDED DESIGN ENGINEER DATE 6/15/01

04/17/2001

SCALE : N.T.S.

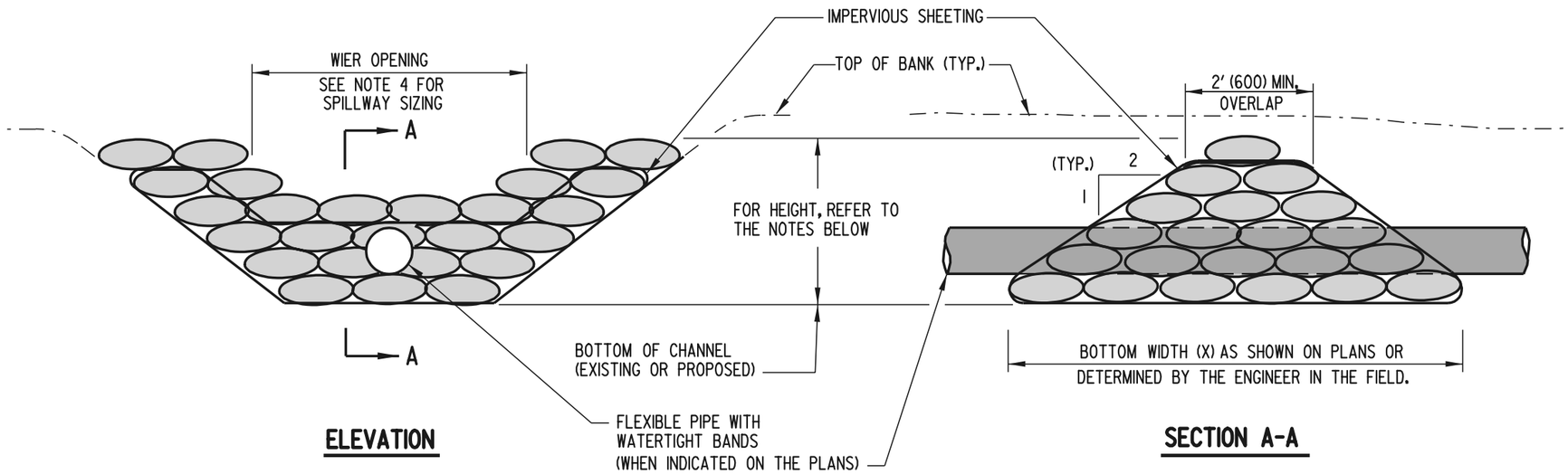

ELEVATION

SECTION A-A

NOTES: 1). THE WORK SHALL CONSIST OF INSTALLING A SANDBAG DIKE FOR THE PURPOSE OF EROSION CONTROL WHEN CONSTRUCTION ACTIVITIES TAKE PLACE WITHIN THE STREAM CHANNEL SUCH AS BANK STABILIZATION OR BRIDGE ABUTMENT CONSTRUCTION.

2). THE SANDBAG DIKE SHALL BE INSTALLED AT THE UPSTREAM LOCATION FIRST.

3). THE HEIGHT OF THE SANDBAG DIKE SHALL BE 1' (300) ABOVE THE PEAK ELEVATION OF THE ONE YEAR STORM, OR EQUAL WITH THE TOP OF BANK, WHICHEVER IS LESS. SEE PLANS FOR INFORMATION.

4). THE SPILLWAY SHALL BE SIZED TO PASS A (1) ONE YEAR STORM EVENT PEAK FLOW, SEE PLANS.

5). THE PIPE, WHEN UTILIZED, SHALL BE SIZED TO PASS THE STREAM BASE FLOW.

PLAN SYMBOL

SBD

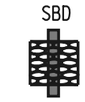

DELAWARE DEPARTMENT OF TRANSPORTATION	SANDBAG DIKE		APPROVED [signature] CHIEF ENGINEER 6/18/01 DATE
	STANDARD NO. E-20 (2001)	SHT. 1 OF 1	RECOMMENDED [signature] DESIGN ENGINEER 6/15/01 DATE

05/21/2001

SCALE : N.T.S.

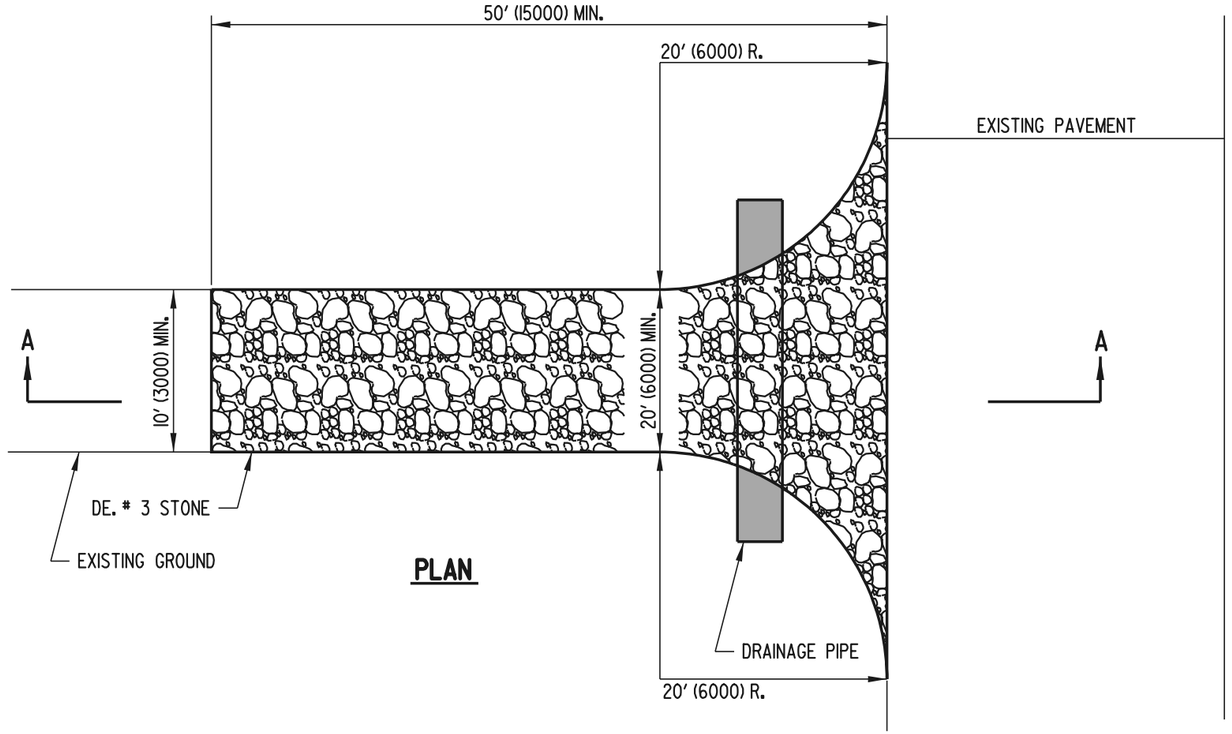

PLAN

NOTES:

1). ALL SURFACE WATER FLOWING OR DIVERTED TOWARD CONSTRUCTION ENTRANCES SHALL BE PIPED UNDER THE ENTRANCE. IF NECESSARY, A MOUNTABLE BERM WITH 5:1 SLOPES SHALL BE ALLOWED TO FACILITATE PLACEMENT OF PIPES IN SHALLOW CONDITIONS.

2). THE LOCATION AND NUMBER OF STABILIZED CONSTRUCTION ENTRANCES SHALL BE AS INDICATED ON THE PLANS. ANY CHANGE IN LOCATION, ADDITION, OR DELETION OF AN ENTRANCE SHALL BE APPROVED IN ADVANCE BY THE ENGINEER.

3). DRAINAGE PIPE, IF UTILIZED, SHALL BE PAID FOR SEPARATELY UNDER THE APPROPRIATE BID ITEM.

4). THE TOP 2" (50) OF STONE SHALL BE REMOVED AND REPLACED WITH 2" (50) OF CLEAN STONE WHEN VOIDS ARE FILLED OR AS DIRECTED BY THE ENGINEER.

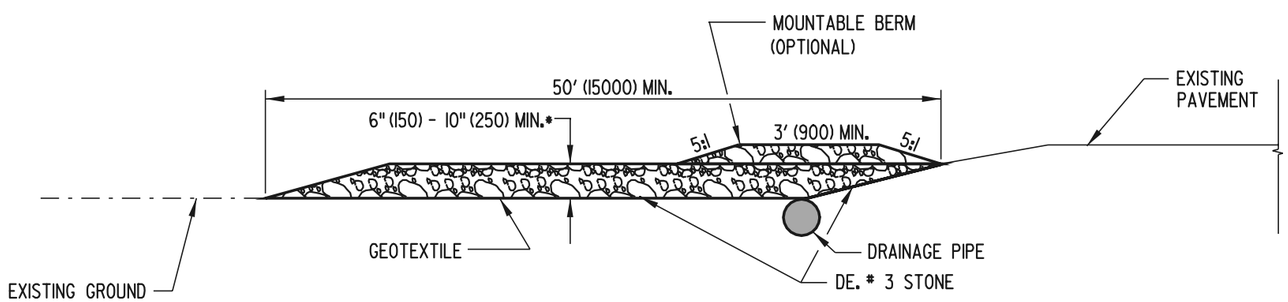

SECTION A-A

* 6" (150) MIN. (≤ 3 AXLE)
10" (250) MIN. (> 3 AXLE)

PLAN SYMBOL

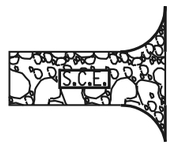

DELAWARE DEPARTMENT OF TRANSPORTATION	STABILIZED CONSTRUCTION ENTRANCE		APPROVED CHIEF ENGINEER 6/18/01 DATE
	STANDARD NO. E-21 (2001)	SHT. 1 OF 1	RECOMMENDED DESIGN ENGINEER 6/15/01 DATE

05/21/2001

SCALE : N.T.S.

NOTES: 1). ALL P.V.C. PIPES ARE TO BE 4" (100) I.D., SCHEDULE 40

2). ALL JOINTS OF THE FLOATATION SECTION SHALL BE SOLVENT WELDED. JOINTS OF SKIMMER SECTION NEED NOT BE WATER-TIGHT.

3). 4" (100) HDPE FLEXIBLE DRAIN PIPE IS TO BE ATTACHED TO THE POND OUTLET STRUCTURE WITH WATER-TIGHT CONNECTIONS.

4). ORIFICE IS TO BE SIZED ACCORDING TO STORAGE VOLUME AND TO SLOWLY RELEASE 1" (25) RUNOFF FOR AT LEAST 24-HOURS.

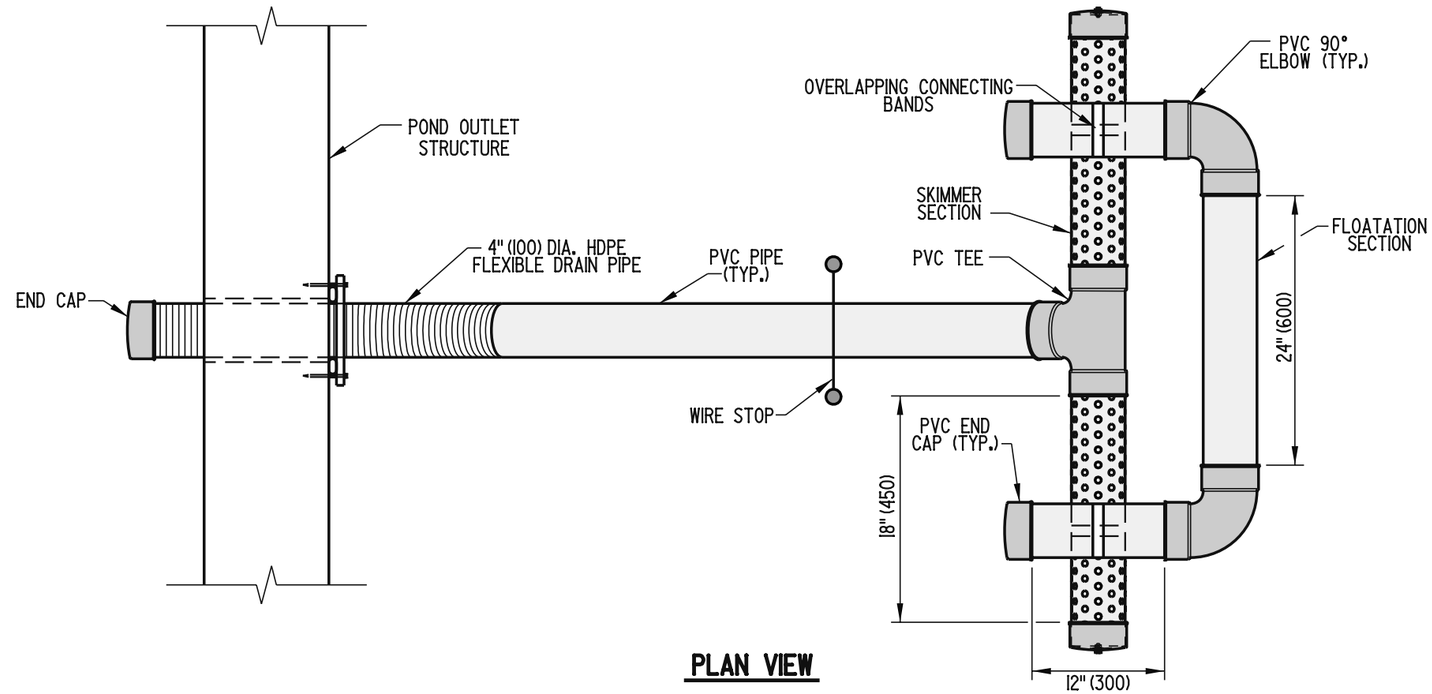

PLAN VIEW

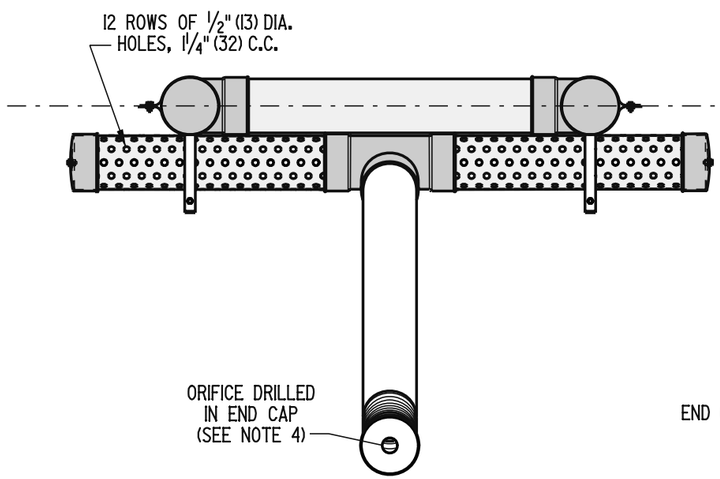

FRONT VIEW

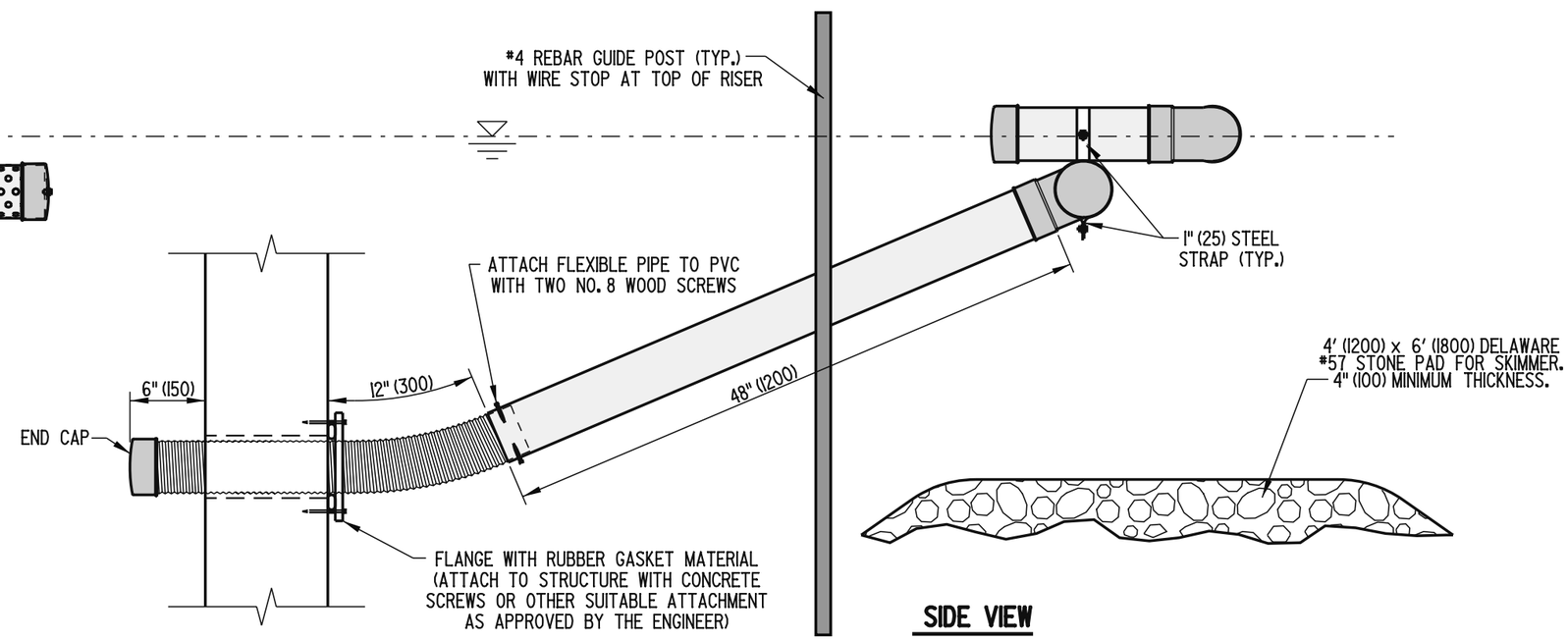

SIDE VIEW

DELAWARE DEPARTMENT OF TRANSPORTATION	SKIMMER DEWATERING DEVICE		APPROVED CHIEF ENGINEER — DATE 10/10/06
	STANDARD NO. E-22 (2006)	SHT. 1 OF 1	RECOMMENDED DESIGN ENGINEER — DATE 10/9/06

10/02/2006

SCALE : N.T.S.

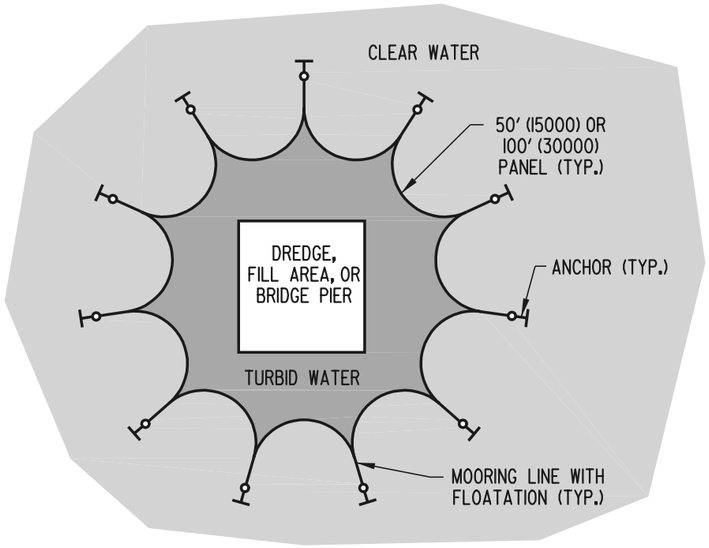

PLAN VIEW
OPEN WATER APPLICATION

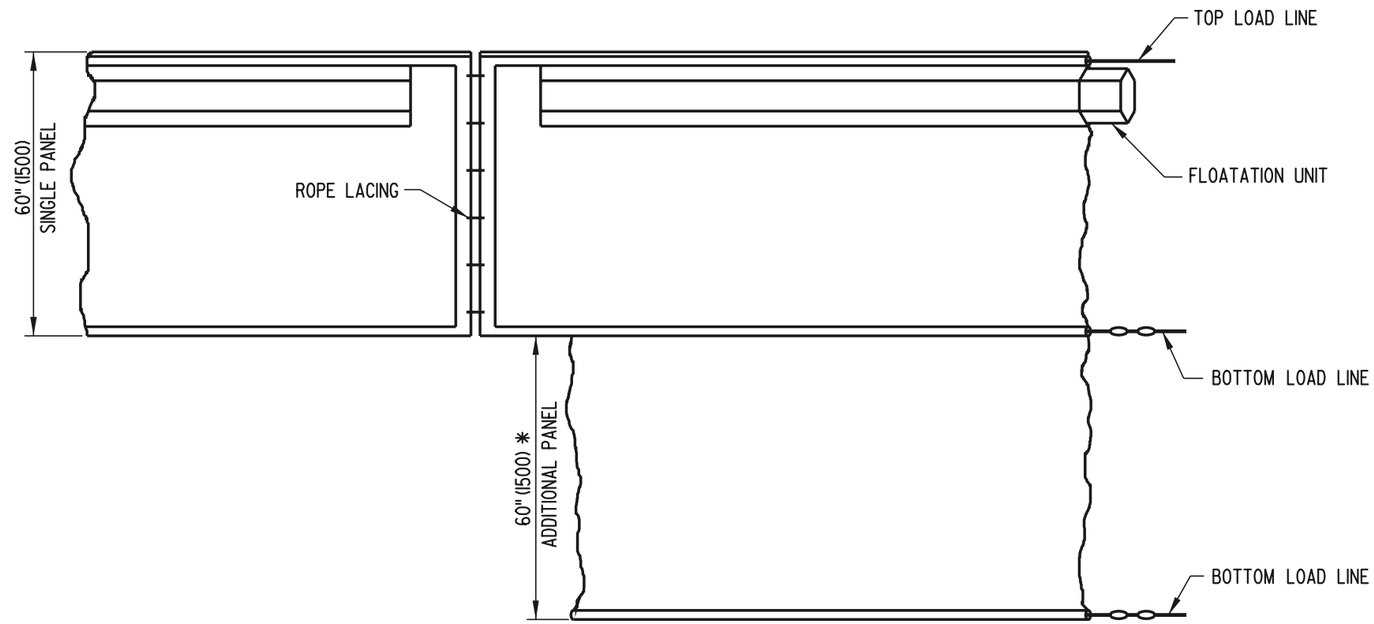

ELEVATION

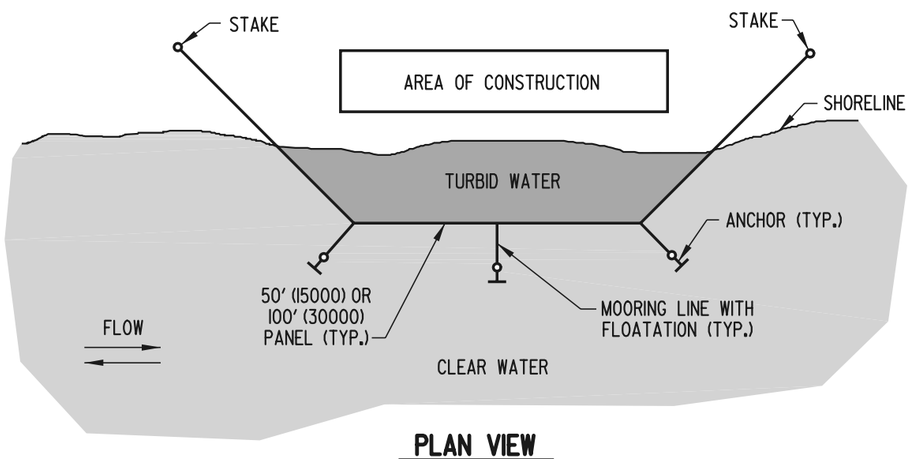

PLAN VIEW
SHORELINE APPLICATION

FLOATING TURBIDITY CURTAIN

NOTE: 1.) ADDITIONAL PANEL REQUIRED FOR DEPTHS GREATER THAN 5' (1500).
2.) FLOATING TURBIDITY CURTAIN SHALL REACH BOTTOM UP TO DEPTHS OF 10' (3000) BY USING TWO PANELS. DEPTHS GREATER THAN 10' (3000) SHALL REQUIRE SPECIAL DEPTH CURTAINS SPECIFICALLY CALLED FOR IN THE PLANS OR AS DIRECTED BY THE ENGINEER.

PLAN SYMBOL

——— FTC ———

DELAWARE DEPARTMENT OF TRANSPORTATION	TURBIDITY CURTAIN		APPROVED [signature] CHIEF ENGINEER 6/18/01 DATE
	STANDARD NO. E-23 (2001)	SHT. 1 OF 2	RECOMMENDED [signature] DESIGN ENGINEER 6/15/01 DATE

04/17/2001

SCALE : N.T.S.

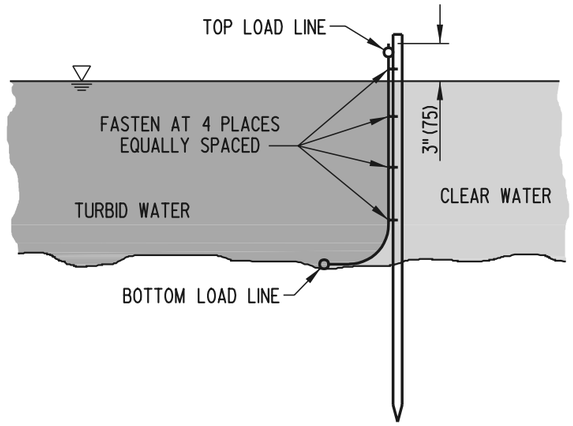

SECTION

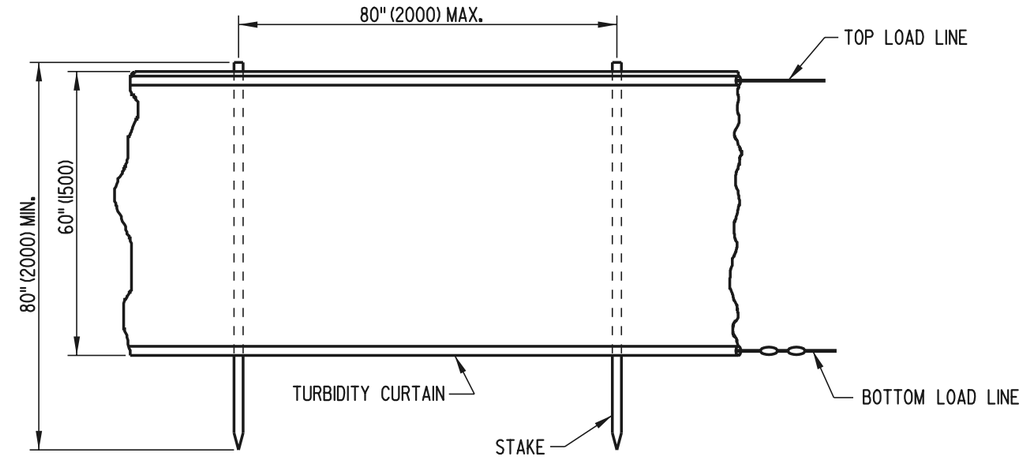

ELEVATION

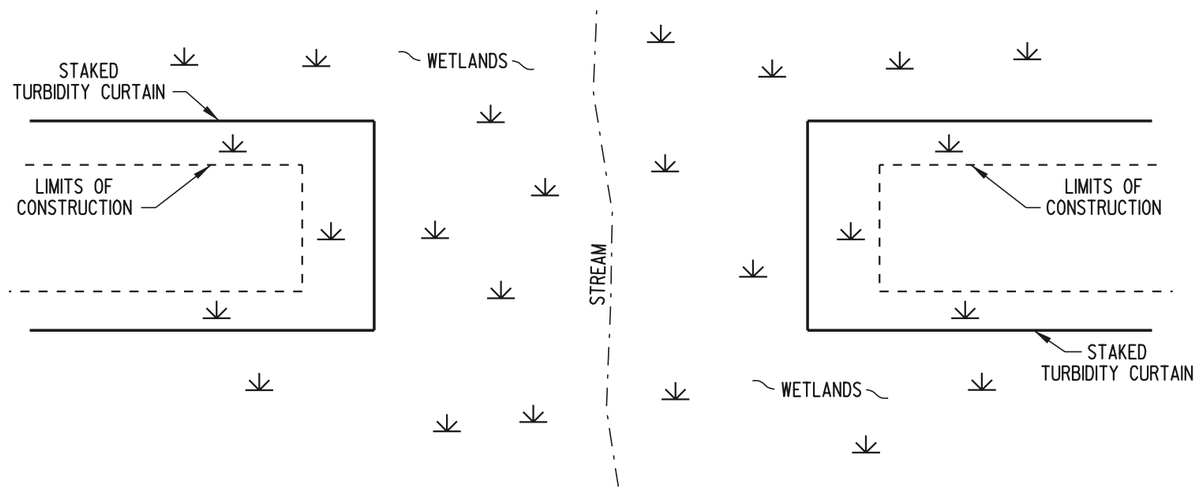

PLAN VIEW

SHALLOW WATER/MARSH APPLICATION

PLAN SYMBOL

——— STC ———

STAKED TURBIDITY CURTAIN

DELAWARE DEPARTMENT OF TRANSPORTATION	TURBIDITY CURTAIN		APPROVED [signature] CHIEF ENGINEER 6/18/01 DATE
	STANDARD NO. E-23 (2001)	SHT. 2 OF 2	RECOMMENDED [signature] DESIGN ENGINEER 6/15/01 DATE

04/17/2001

SCALE : N.T.S.

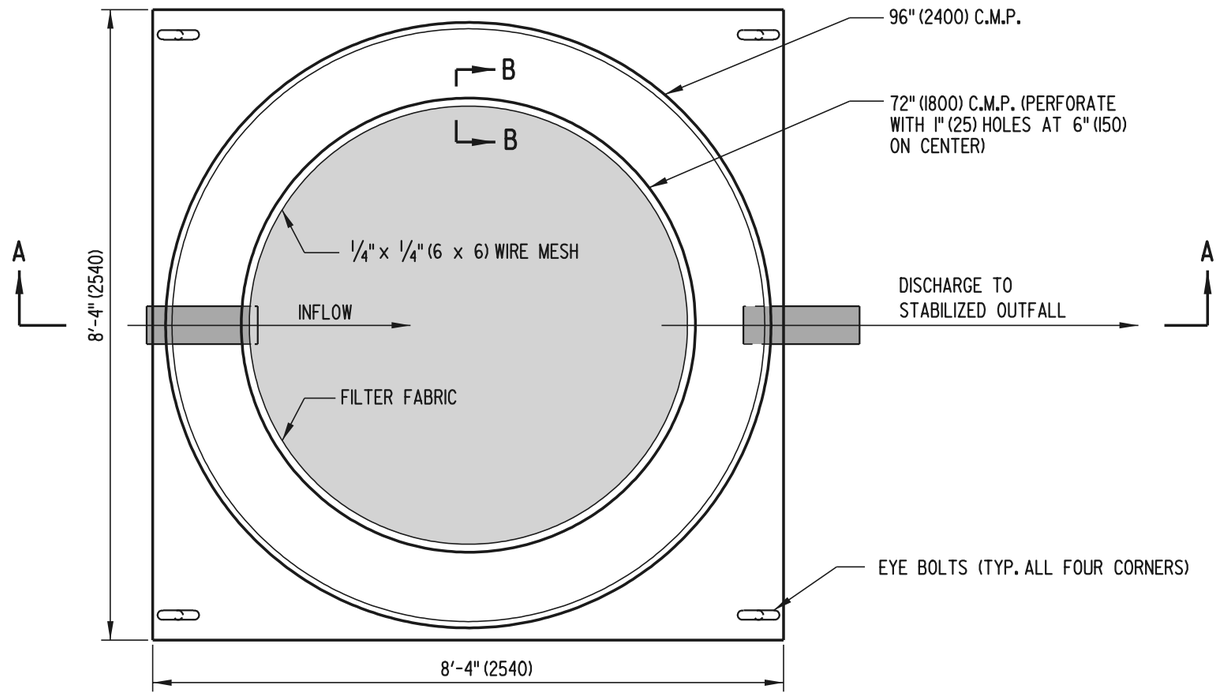

PLAN

NOTES:

1). THE PORTABLE SEDIMENT TANK SHOWN MAY BE USED IN SITES WHERE SPACE IS LIMITED TO CONSTRUCT A DEWATERING BASIN.

2). THE MAXIMUM PUMP DISCHARGE INTO THIS TYPICAL PORTABLE SEDIMENT TANK SHALL BE 425 GALLONS PER MINUTE (26 LITERS PER SECOND). THE FILTER FABRIC SHALL BE REPLACED WHEN THE PORTABLE SEDIMENT TANK CAN NO LONGER ALLOW THIS FLOW RATE, WHEN THERE IS A TEAR, OR WHEN DIRECTED BY THE ENGINEER.

3). SEVERAL UN-CONNECTED OR CONNECTED IN PARALLEL PORTABLE SEDIMENT TANKS MAY BE USED WHEN A HIGHER FLOW RATE IS NEEDED TO DE-WATER THE JOB.

4). OTHER DESIGNS MAY BE USED PROVIDED THE HYDRAULIC DESIGN IS SUBMITTED TO AND APPROVED BY THE STORMWATER ENGINEER.

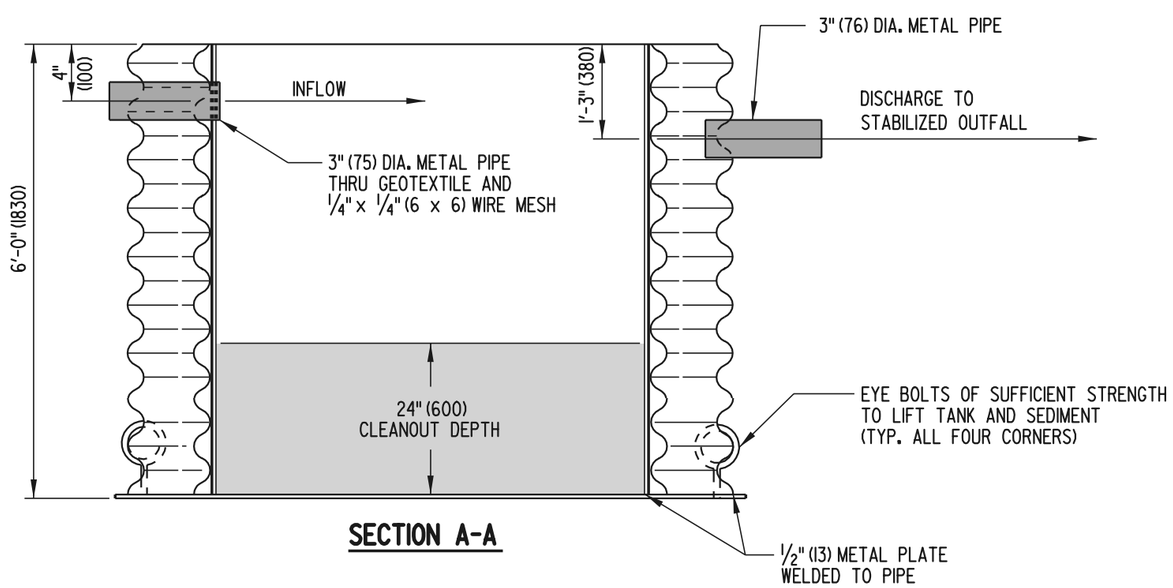

SECTION A-A

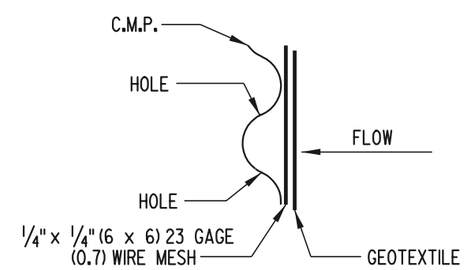

SECTION B-B

PLAN SYMBOL

PST

DELAWARE DEPARTMENT OF TRANSPORTATION	PORTABLE SEDIMENT TANK			APPROVED CHIEF ENGINEER 6/18/01 DATE
	STANDARD NO. E-24 (2001)	SHT. 1 OF 1		RECOMMENDED DESIGN ENGINEER 6/15/01 DATE

05/21/2001

SCALE : N.T.S.

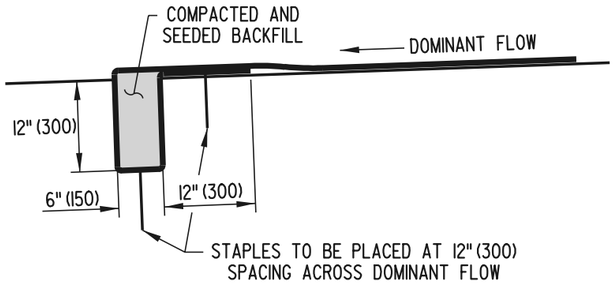

INITIAL TRENCH ANCHOR DETAIL

APPLIED AT THE DOWNSTREAM END OF DITCH

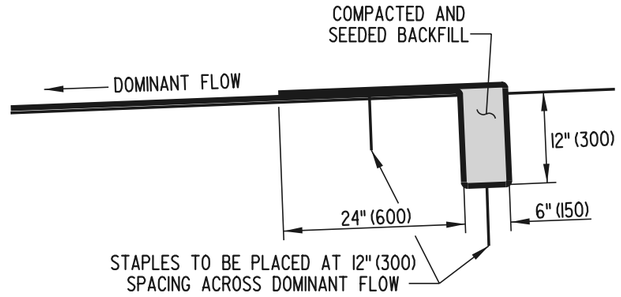

TERMINAL TRENCH ANCHOR DETAIL

APPLIED AT THE UPSTREAM END OF DITCH

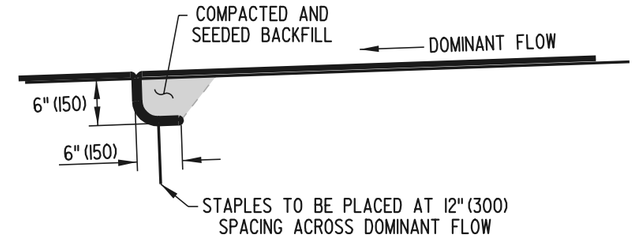

CHECK SLOT DETAIL

(AS NEEDED PER PLANS)

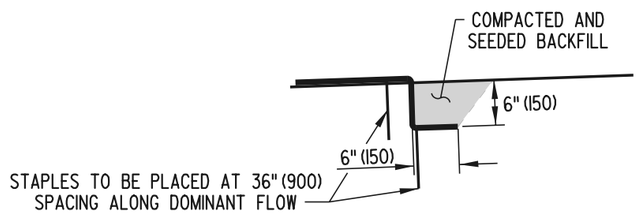

LONGITUDINAL TRENCH ANCHOR DETAIL

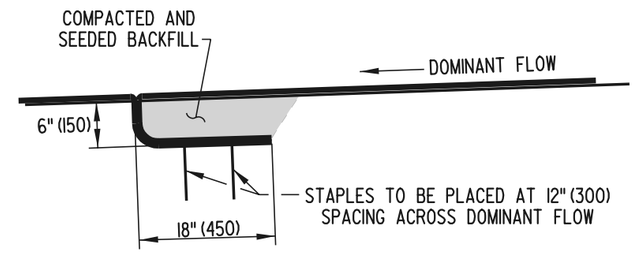

OVERLAP DETAIL

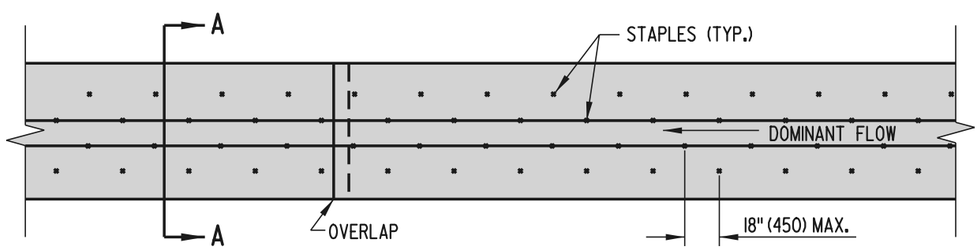

STABILIZATION OF DITCHES PLAN

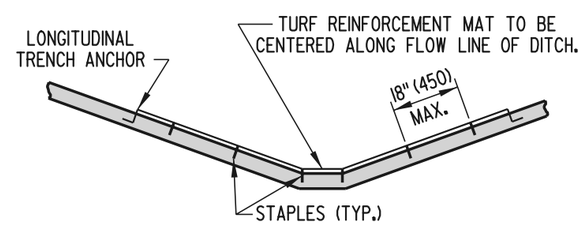

STABILIZATION OF DITCHES SECTION A-A

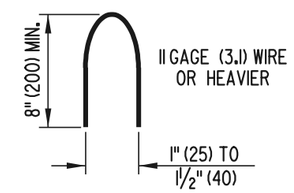

STAPLE DETAIL

NOTES:
1. ADDITIONAL STAPLES NOT SHOWN ARE REQUIRED AT OVERLAPS, ENDS, CHECK SLOTS AND EDGES. SEE APPROPRIATE DETAILS FOR STAPLE PLACEMENT.
2. STAPLES ARE TO BE STAGGERED.
3. TOPSOIL UNDER TURF REINFORCEMENT MAT IS TO BE TRACKED AND SEEDED.

PLAN SYMBOL

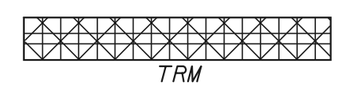

DELAWARE DEPARTMENT OF TRANSPORTATION	TURF REINFORCEMENT MAT APPLICATIONS		APPROVED [signature] CHIEF ENGINEER 6/18/01 DATE
	STANDARD NO. E-25 (2001)	SHT. 1 OF 1	RECOMMENDED [signature] DESIGN ENGINEER 6/15/01 DATE

05/31/2001

SCALE : N.T.S.

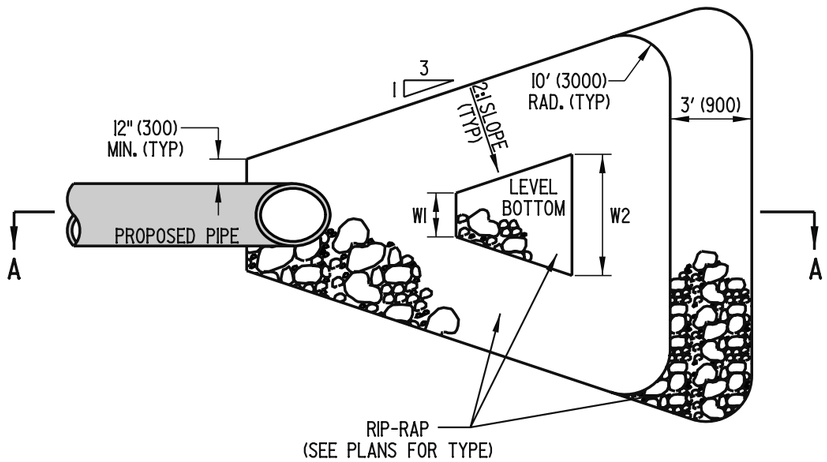

PLAN VIEW

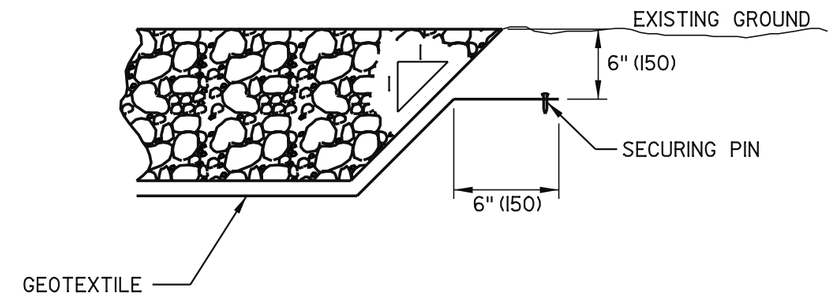

DETAIL B

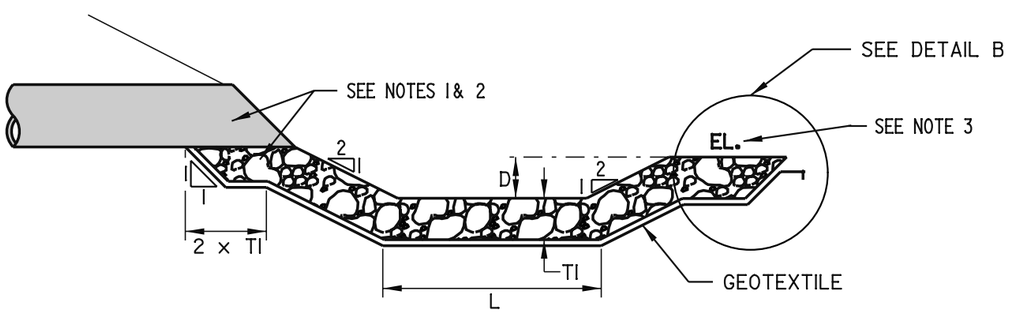

SECTION A-A

NOTES:

1. RIPRAP IS TO BE PLACED PRIOR TO PLACING PIPE.
2. PLACE DELAWARE NO. 3 STONE UNDER PIPE.
3. ELEVATION (EL.) SHOULD NOT BE HIGHER THAN PIPE INVERT.
4. REFER TO THE PIPE ENERGY DISSIPATOR SCHEDULE ON THE CONSTRUCTION PLANS FOR THE VALUE OF DIMENSION VARIABLES.

DELAWARE DEPARTMENT OF TRANSPORTATION	RIPRAP ENERGY DISSIPATOR DETAIL		APPROVED CHIEF ENGINEER — DATE 10/10/06
	STANDARD NO. E-26 (2006)	SHT. 1 OF 1	RECOMMENDED DESIGN ENGINEER — DATE 10/9/06

08/04/2006

SCALE : N.T.S.

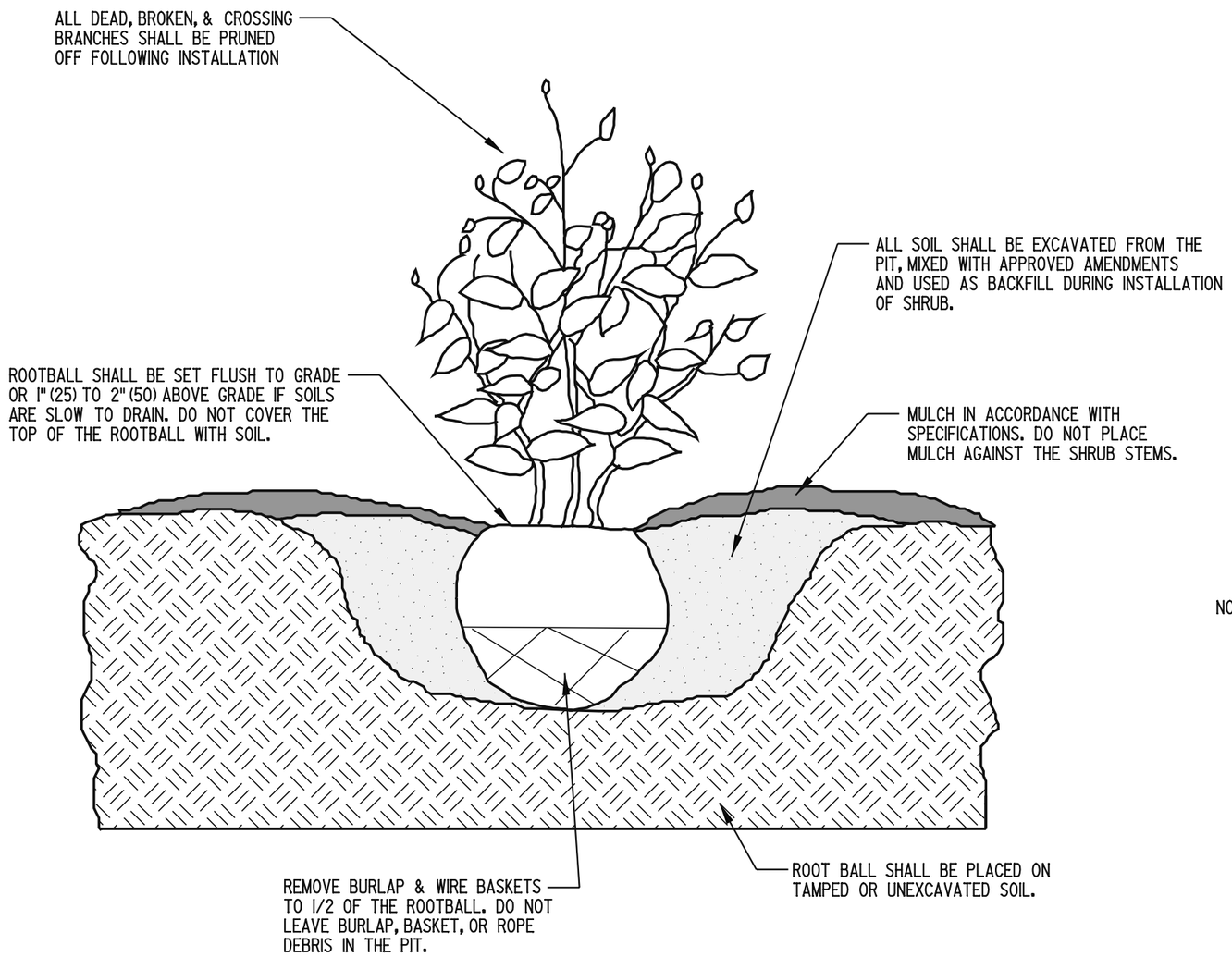

NOTES:

1). BASE OF PLANTING PIT SHALL BE A MINIMUM WIDTH OF TWICE THE ROOT BALL SIZE AND A MAXIMUM OF THREE TIMES THE ROOT BALL SIZE.
2). SHRUBS SHALL BE INSTALLED IN MASSES OF NO LESS THAN 3 PLANTS. A MINIMUM OF 6' (1800) WIDTH IS REQUIRED FROM THE BACK OF CURB TO THE EDGE OF SIDEWALK FOR INSTALLATION OF SHRUBS.
3). ALL PRUNING SHALL BE DONE BY AN I.S.A. CERTIFIED ARBORIST, CERTIFIED NURSERY PROFESSIONAL, OR UNDER THE DIRECTION THEREOF. DO NOT HEAVILY PRUNE SHRUBS AT PLANTING.
4). AUGERED HOLES SHALL BE HAND DUG TO FINAL WIDTH AND TO ELIMINATE GLAZING.
5). ALL SHRUB MASSES SHALL BE MULCHED AS ONE CONTINUOUS BED.

ROADSIDE SHRUB PLANTING DETAIL

DELAWARE DEPARTMENT OF TRANSPORTATION	PLANTING DETAILS		APPROVED CHIEF ENGINEER DATE 10/10/06
	STANDARD NO. L-1 (2006)	SHT. 1 OF 3	RECOMMENDED DESIGN ENGINEER DATE 10/9/06

08/04/2006

SCALE : N.T.S.

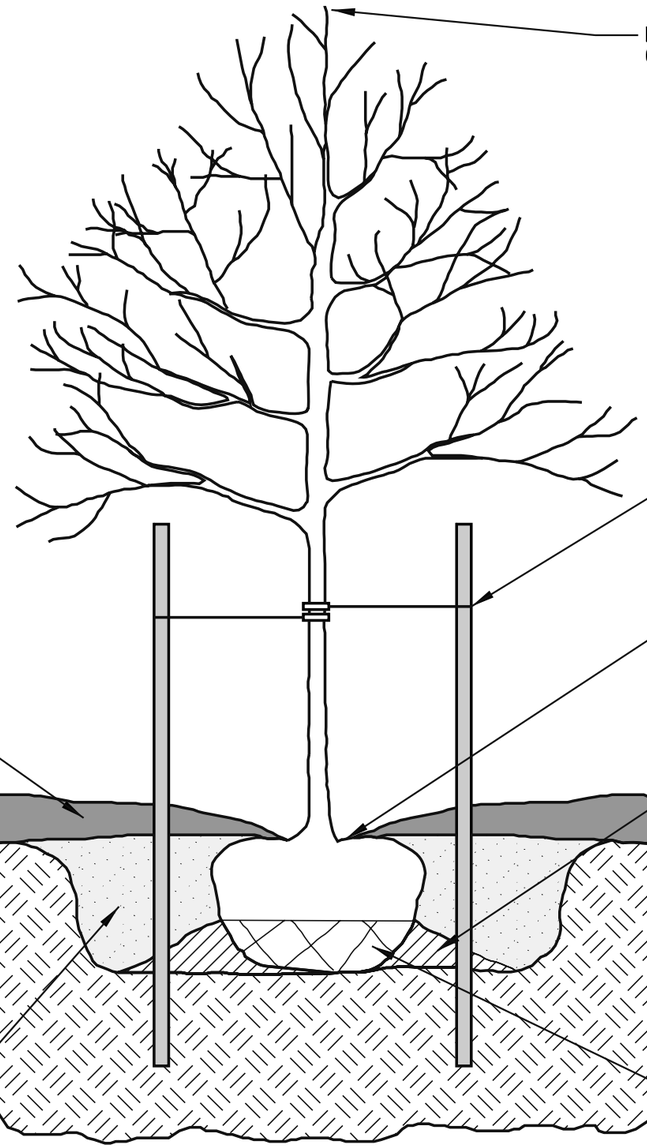

DO NOT PRUNE THE DOMINANT LEADER OR TERMINAL BUDS OF THE CROWN.

NOTES

1). ALL PRUNING SHALL BE DONE BY OR UNDER THE DIRECTION OF, AN I.S.A. CERTIFIED ARBORIST OR CERTIFIED NURSERY PROFESSIONAL. DO NOT HEAVILY PRUNE TREES AT PLANTING.
2). ALL DEAD, BROKEN, & CROSSING BRANCHES SHALL BE PRUNED OFF FOLLOWING INSTALLATION.
3). BASE OF PLANTING PIT SIZE SHALL BE A MINIMUM WIDTH OF TWICE THE ROOT BALL SIZE AND A MAXIMUM OF THREE TIMES THE ROOT BALL SIZE.
4). WHEN PLANTING TREES ALONG STREETS, THERE MUST BE A MINIMUM OF 6' (1800) BETWEEN THE BACK OF CURB AND THE EDGE OF SIDEWALK AND SHALL BE CENTERED BETWEEN THE BACK OF CURB AND THE EDGE OF SIDEWALK.
5). WHEN PLANTING TREES ALONG SIDEWALKS, THE TREE SHALL BE LIMBED TO 7' (2100) FOR PEDESTRIAN CLEARANCE.

STAKE & GUY TREES. GUY WIRE, STAKES, & RUBBER HOSE SHALL BE AS SPECIFIED IN SECTION 737.

SET ROOT BALL FLUSH TO GRADE OR 1" (25) TO 2" (50) ABOVE GRADE IF SOILS ARE SLOW TO DRAIN. PLANT TREES SUCH THAT THE TRUNK FLARE IS VISIBLE. ANY TREE WHERE TRUNK FLARE IS NOT VISIBLE SHALL BE REJECTED. DO NOT COVER THE TOP OF THE ROOT BALL WITH SOIL.

MULCH IN ACCORDANCE WITH SPECIFICATIONS. DO NOT PLACE MULCH AGAINST THE TRUNK.

TAMP SOIL AROUND THE ROOT BALL BASE WITH FOOT PRESSURE SO ROOT BALL DOES NOT SHIFT.

ALL SOIL SHALL BE EXCAVATED FROM THE PIT, MIXED WITH APPROVED AMENDMENTS AS PER SPECIFICATIONS AND USED AS BACKFILL DURING INSTALLATION OF TREES. PLACE ROOT BALL ON TAMPED OR UNEXCAVATED SOIL.

REMOVE BURLAP AND BASKETS TO 1/2 OF THE ROOT BALL. DO NOT BURY EXCESS BURLAP, ROPE OR REMNANTS OF BASKET IN THE PLANTING PIT.

TREE PLANTING DETAIL

DELAWARE DEPARTMENT OF TRANSPORTATION	PLANTING DETAILS		APPROVED CHIEF ENGINEER — DATE 10/10/06
	STANDARD NO. L-1 (2006)	SHT. 2 OF 3	RECOMMENDED DESIGN ENGINEER — DATE 10/3/06

08/04/2006