SCALE : N.T.S.

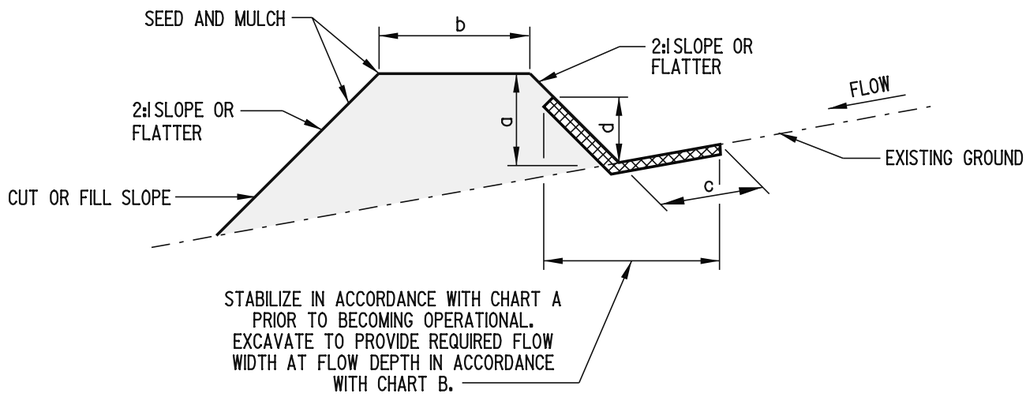

SECTION A-A

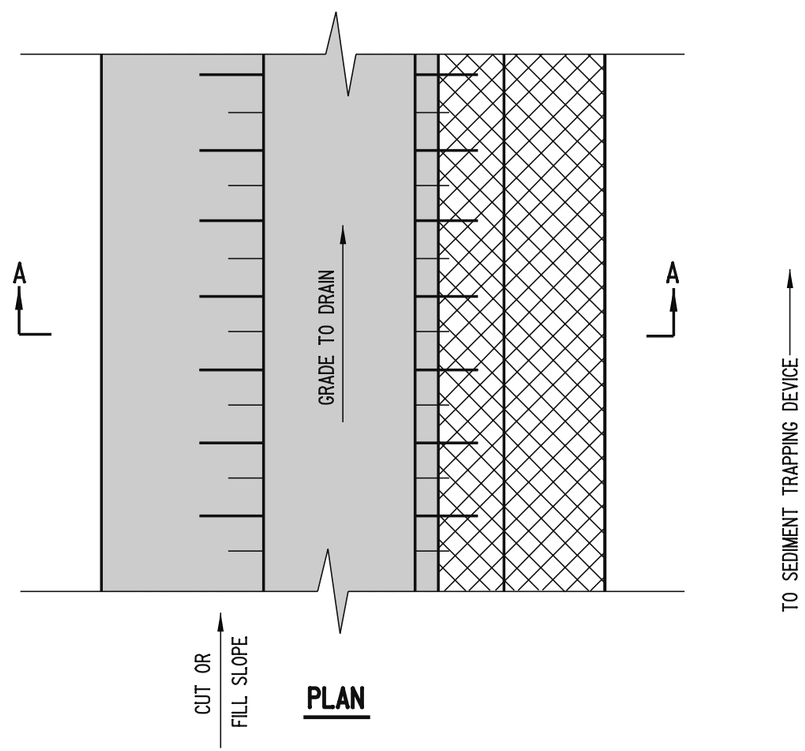

PLAN

CHART A - FLOW CHANNEL STABILIZATION		
TYPE	CHANNEL GRADE	TYPE OF TREATMENT
1	0.5-2.0%	SEED AND EROSION CONTROL BLANKET
2	2.1-8.0%	R-4 RIPRAP
3	8.1-20%	ENGINEERED DESIGN

CHART B - EARTH DIKE DIMENSIONS		
SYMBOL	DIKE A (5 ac (2 ha) or less)	DIKE B (5-10ac(2-4 ha))
a-DIKE HEIGHT	12" (300)	18" (450)
b-DIKE WIDTH	12" (300)	24" (600)
c-FLOW WIDTH	48" (1200)	72" (1800)
d-FLOW DEPTH	14" (350)	27" (680)

NOTES: 1). IF DESIRED, TOP WIDTH MAY BE WIDER AND SIDE SLOPES MAY BE FLATTER TO FACILITATE CROSSING BY CONSTRUCTION TRAFFIC.

2). FIELD LOCATION SHOULD BE ADJUSTED AS NEEDED TO INSURE A STABILIZED OUTFALL.

DELAWARE DEPARTMENT OF TRANSPORTATION	EARTH DIKE		APPROVED Carolann Wicks CHIEF ENGINEER 12/5/05 DATE
	STANDARD NO. E-13 (2005)	SHT. 1 OF 1	RECOMMENDED [signature] DESIGN ENGINEER 11/29/05 DATE

09/02/2005