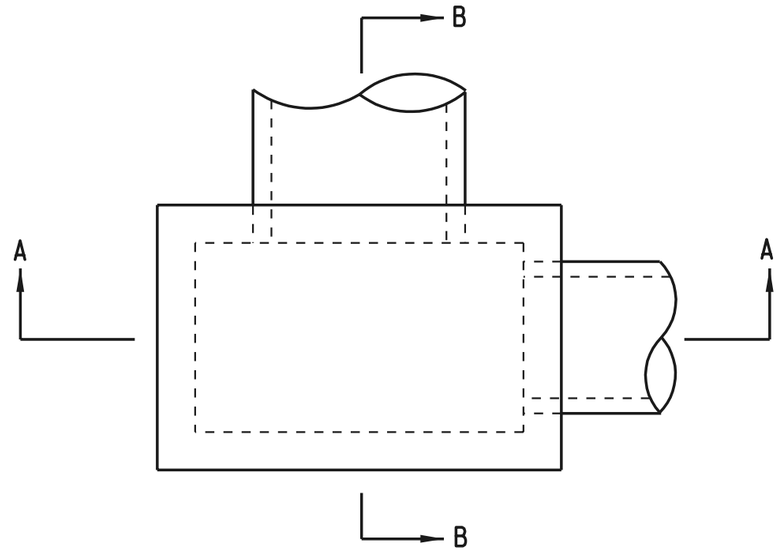

PLAN

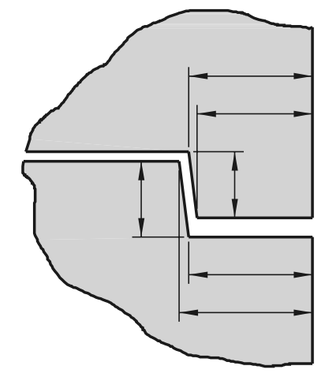

TYPE I JOINT DETAIL

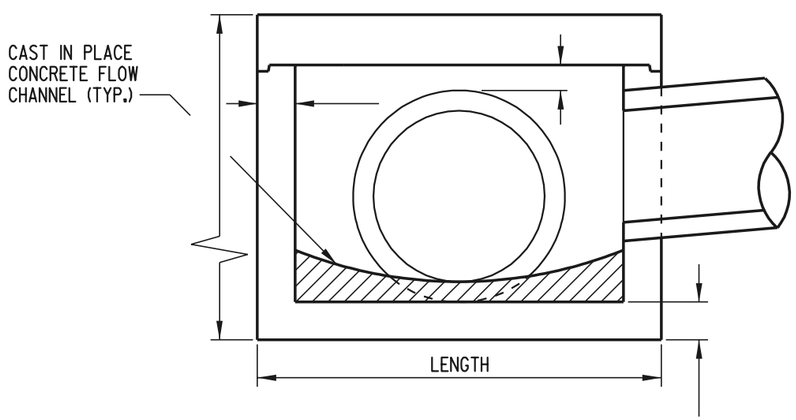

SECTION A-A

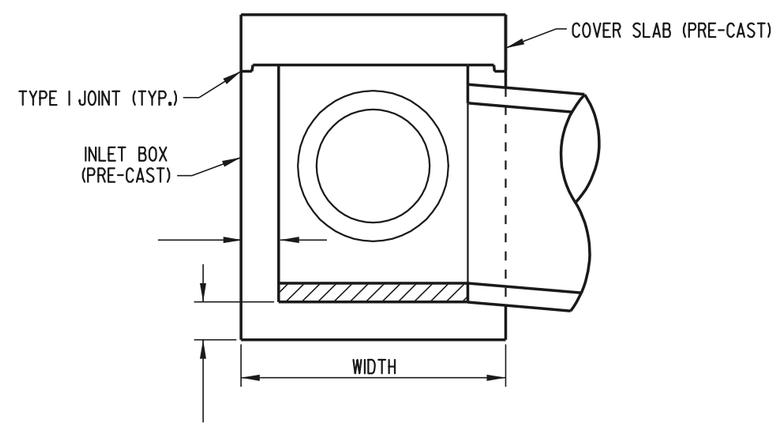

SECTION B-B

JUNCTION BOX ASSEMBLY

JUNCTION BOX DETAILS

11/4/98